3142 – DET3

PROJECT INFORMATION

ENGINEERED PRODUCT MANAGER:	CODY NEATH 519-465-9958 CODY.NEATH@ADS-PIPE.COM
ADS SALES REP:	ROBERT HUGHES 416-389-5729 ROBERT.HUGHES@ADS-PIPE.COM
PROJECT NO:	S130647

ADVANCED DRAINAGE SYSTEMS, INC.

SiteASSIST by StormTech FOR STORMTECH INSTRUCTIONS, DOWNLOAD THE INSTALLATION APP

DUNDALK SELF STORAGE

DUNDALK, ON.

MC-3500 STORMTECH CHAMBER SPECIFICATIONS

1. CHAMBERS SHALL BE STORMTECH MC-3500.
2. CHAMBERS SHALL BE ARCH-SHAPED AND SHALL BE MANUFACTURED FROM VIRGIN, IMPACT-MODIFIED POLYPROPYLENE COPOLYMERS.
3. CHAMBERS SHALL BE CERTIFIED TO CSA B184, "POLYMERIC SUB-SURFACE STORMWATER MANAGEMENT STRUCTURES", AND MEET THE REQUIREMENTS OF ASTM F2418-16a, "STANDARD SPECIFICATION FOR POLYPROPYLENE (PP) CORRUGATED WALL STORMWATER COLLECTION CHAMBERS" CHAMBER CLASSIFICATION 45x76 DESIGNATION SS.
4. CHAMBER ROWS SHALL PROVIDE CONTINUOUS, UNOBSTRUCTED INTERNAL SPACE WITH NO INTERNAL SUPPORTS THAT WOULD IMPEDE FLOW OR LIMIT ACCESS FOR INSPECTION.
5. THE STRUCTURAL DESIGN OF THE CHAMBERS, THE STRUCTURAL BACKFILL, AND THE INSTALLATION REQUIREMENTS SHALL ENSURE THAT THE LOAD FACTORS SPECIFIED IN THE AASHTO LRFD BRIDGE DESIGN SPECIFICATIONS, SECTION 12.12, ARE MET FOR: 1) LONG-DURATION DEAD LOADS AND 2) SHORT-DURATION LIVE LOADS, BASED ON THE CSA S6 CL-625 TRUCK AND THE AASHTO DESIGN TRUCK WITH CONSIDERATION FOR IMPACT AND MULTIPLE VEHICLE PRESENCES.
6. CHAMBERS SHALL BE DESIGNED, TESTED AND ALLOWABLE LOAD CONFIGURATIONS DETERMINED IN ACCORDANCE WITH ASTM F2787, "STANDARD PRACTICE FOR STRUCTURAL DESIGN OF THERMOPLASTIC CORRUGATED WALL STORMWATER COLLECTION CHAMBERS". LOAD CONFIGURATIONS SHALL INCLUDE: 1) INSTANTANEOUS (<1 MIN) AASHTO DESIGN TRUCK LIVE LOAD ON MINIMUM COVER 2) MAXIMUM PERMANENT (75-YR) COVER LOAD AND 3) ALLOWABLE COVER WITH PARKED (1-WEEK) AASHTO DESIGN TRUCK.
7. REQUIREMENTS FOR HANDLING AND INSTALLATION:
   - TO MAINTAIN THE WIDTH OF CHAMBERS DURING SHIPPING AND HANDLING, CHAMBERS SHALL HAVE INTEGRAL, INTERLOCKING STACKING LUGS.
   - TO ENSURE A SECURE JOINT DURING INSTALLATION AND BACKFILL, THE HEIGHT OF THE CHAMBER JOINT SHALL NOT BE LESS THAN 75 mm (3").
   - TO ENSURE THE INTEGRITY OF THE ARCH SHAPE DURING INSTALLATION, a) THE ARCH STIFFNESS CONSTANT AS DEFINED IN SECTION 6.2.8 OF ASTM F2418 SHALL BE GREATER THAN OR EQUAL TO 500 LBS/IN/IN. AND b) TO RESIST CHAMBER DEFORMATION DURING INSTALLATION AT ELEVATED TEMPERATURES (ABOVE 23° C / 73° F), CHAMBERS SHALL BE PRODUCED FROM REFLECTIVE GOLD OR YELLOW COLORS.
8. ONLY CHAMBERS THAT ARE APPROVED BY THE SITE DESIGN ENGINEER WILL BE ALLOWED. UPON REQUEST BY THE SITE DESIGN ENGINEER OR OWNER, THE CHAMBER MANUFACTURER SHALL SUBMIT A STRUCTURAL EVALUATION FOR APPROVAL BEFORE DELIVERING CHAMBERS TO THE PROJECT SITE AS FOLLOWS:
   - THE STRUCTURAL EVALUATION SHALL BE SEALED BY A REGISTERED PROFESSIONAL ENGINEER.
   - THE STRUCTURAL EVALUATION SHALL DEMONSTRATE THAT THE SAFETY FACTORS ARE GREATER THAN OR EQUAL TO 1.95 FOR DEAD LOAD AND 1.75 FOR LIVE LOAD, THE MINIMUM REQUIRED BY ASTM F2787 AND BY SECTIONS 3 AND 12.12 OF THE AASHTO LRFD BRIDGE DESIGN SPECIFICATIONS FOR THERMOPLASTIC PIPE.
   - THE TEST DERIVED CREEP MODULUS AS SPECIFIED IN ASTM F2418 SHALL BE USED FOR PERMANENT DEAD LOAD DESIGN EXCEPT THAT IT SHALL BE THE 75-YEAR MODULUS USED FOR DESIGN.
9. CHAMBERS AND END CAPS SHALL BE PRODUCED AT AN ISO 9001 CERTIFIED MANUFACTURING FACILITY.

IMPORTANT - NOTES FOR THE BIDDING AND INSTALLATION OF MC-3500 CHAMBER SYSTEM

1. STORMTECH MC-3500 CHAMBERS SHALL NOT BE INSTALLED UNTIL THE MANUFACTURER'S REPRESENTATIVE HAS COMPLETED A PRE-CONSTRUCTION MEETING WITH THE INSTALLERS.
2. STORMTECH MC-3500 CHAMBERS SHALL BE INSTALLED IN ACCORDANCE WITH THE "STORMTECH MC-3500/MC-4500 CONSTRUCTION GUIDE".
3. CHAMBERS ARE NOT TO BE BACKFILLED WITH A DOZER OR AN EXCAVATOR SITUATED OVER THE CHAMBERS. STORMTECH RECOMMENDS 3 BACKFILL METHODS:
   - STONESHOOTER LOCATED OFF THE CHAMBER BED.
   - BACKFILL AS ROWS ARE BUILT USING AN EXCAVATOR ON THE FOUNDATION STONE OR SUBGRADE.
   - BACKFILL FROM OUTSIDE THE EXCAVATION USING A LONG BOOM HOE OR EXCAVATOR.
4. THE FOUNDATION STONE SHALL BE LEVELED AND COMPACTED PRIOR TO PLACING CHAMBERS.
5. JOINTS BETWEEN CHAMBERS SHALL BE PROPERLY SEATED PRIOR TO PLACING STONE.
6. MAINTAIN MINIMUM - 230 mm (9") SPACING BETWEEN THE CHAMBER ROWS.
7. INLET AND OUTLET MANIFOLDS MUST BE INSERTED A MINIMUM OF 300 mm (12") INTO CHAMBER END CAPS.
8. EMBEDMENT STONE SURROUNDING CHAMBERS MUST BE A CLEAN, CRUSHED, ANGULAR STONE MEETING THE AASHTO M43 DESIGNATION OF #3 OR #4.
9. STONE MUST BE PLACED ON THE TOP CENTER OF THE CHAMBER TO ANCHOR THE CHAMBERS IN PLACE AND PRESERVE ROW SPACING.
10. THE CONTRACTOR MUST REPORT ANY DISCREPANCIES WITH CHAMBER FOUNDATION MATERIALS BEARING CAPACITIES TO THE SITE DESIGN ENGINEER.
11. ADS RECOMMENDS THE USE OF "FLEXSTORM CATCH IT" INSERTS DURING CONSTRUCTION FOR ALL INLETS TO PROTECT THE SUBSURFACE STORMWATER MANAGEMENT SYSTEM FROM CONSTRUCTION SITE RUNOFF.

NOTES FOR CONSTRUCTION EQUIPMENT

1. STORMTECH MC-3500 CHAMBERS SHALL BE INSTALLED IN ACCORDANCE WITH THE "STORMTECH MC-3500/MC-4500 CONSTRUCTION GUIDE".
2. THE USE OF EQUIPMENT OVER MC-3500 CHAMBERS IS LIMITED:
   - NO EQUIPMENT IS ALLOWED ON BARE CHAMBERS.
   - NO RUBBER TIRED LOADER, DUMP TRUCK, OR EXCAVATORS ARE ALLOWED UNTIL PROPER FILL DEPTHS ARE REACHED IN ACCORDANCE WITH THE "STORMTECH MC-3500/MC-4500 CONSTRUCTION GUIDE".
   - WEIGHT LIMITS FOR CONSTRUCTION EQUIPMENT CAN BE FOUND IN THE "STORMTECH MC-3500/MC-4500 CONSTRUCTION GUIDE".
3. FULL 900 mm (36") OF STABILIZED COVER MATERIALS OVER THE CHAMBERS IS REQUIRED FOR DUMP TRUCK TRAVEL OR DUMPING.

USE OF A DOZER TO PUSH EMBEDMENT STONE BETWEEN THE ROWS OF CHAMBERS MAY CAUSE DAMAGE TO CHAMBERS AND IS NOT AN ACCEPTABLE BACKFILL METHOD. ANY CHAMBERS DAMAGED BY USING THE "DUMP AND PUSH" METHOD ARE NOT COVERED UNDER THE STORMTECH STANDARD WARRANTY.

CONTACT STORMTECH AT 1-888-892-2694 WITH ANY QUESTIONS ON INSTALLATION REQUIREMENTS OR WEIGHT LIMITS FOR CONSTRUCTION EQUIPMENT.

©2013 ADS, INC.

PROPOSED LAYOUT

13	STORMTECH MC-3500 CHAMBERS
2	STORMTECH MC-3500 END CAPS
305	STONE ABOVE (mm)
230	STONE BELOW (mm)
40	% STONE VOID
88.1	**INSTALLED SYSTEM VOLUME (m³) (PERIMETER STONE INCLUDED)**
94.5	SYSTEM AREA (m²)
69.7	SYSTEM PERIMETER (m)

PROPOSED ELEVATIONS

520.861	MAXIMUM ALLOWABLE GRADE (TOP OF PAVEMENT/UNPAVED):
519.185	MINIMUM ALLOWABLE GRADE (UNPAVED WITH TRAFFIC):
519.033	MINIMUM ALLOWABLE GRADE (UNPAVED NO TRAFFIC):
519.033	MINIMUM ALLOWABLE GRADE (BASE OF FLEXIBLE PAVEMENT):
519.033	MINIMUM ALLOWABLE GRADE (TOP OF RIGID PAVEMENT):
518.728	TOP OF STONE:
518.423	TOP OF MC-3500 CHAMBER:
517.332	600 mm ISOLATOR ROW INVERT:
517.280	BOTTOM OF MC-3500 CHAMBER:
517.050	UNDERDRAIN INVERT:
517.050	BOTTOM OF STONE:

NOTES

- MANIFOLD SIZE TO BE DETERMINED BY SITE DESIGN ENGINEER. SEE TECH SHEET #7 FOR MANIFOLD SIZING GUIDANCE.
- DUE TO THE ADAPTATION OF THIS CHAMBER SYSTEM TO SPECIFIC SITE AND DESIGN CONSTRAINTS, IT MAY BE NECESSARY TO CUT AND COUPLE ADDITIONAL PIPE TO STANDARD MANIFOLD COMPONENTS IN THE FIELD.
- THE SITE DESIGN ENGINEER MUST REVIEW ELEVATIONS AND IF NECESSARY ADJUST GRADING TO ENSURE THE CHAMBER COVER REQUIREMENTS ARE MET.
- THIS CHAMBER SYSTEM WAS DESIGNED WITHOUT SITE-SPECIFIC INFORMATION ON SOIL CONDITIONS OR BEARING CAPACITY. THE SITE DESIGN ENGINEER IS RESPONSIBLE FOR DETERMINING THE SUITABILITY OF THE SOIL AND PROVIDING THE BEARING CAPACITY OF THE INSITU SOILS. THE BASE STONE DEPTH MAY BE INCREASED OR DECREASED ONCE THIS INFORMATION IS PROVIDED.
- ~~THE STORMTECH SYSTEM DEPICTED DOES NOT INCLUDE WATER QUALITY MEASURES AND/OR DOES NOT PROVIDE THE ABILITY TO BE INSPECTED, CLEANED, AND MAINTAINED. NOT MAINTAINING THE SYSTEM MAY LEAD TO A DECREASE IN STORAGE VOLUME OVER TIME. ADS RECOMMENDS THE USE OF THE ISOLATOR ROW ON ALL STORMTECH SYSTEMS.~~

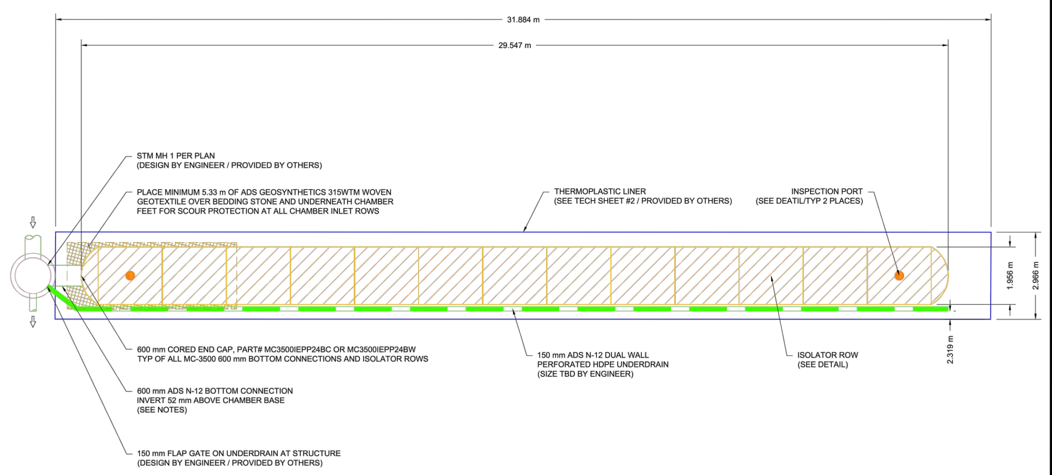

DUNDALK SELF STORAGE DUNDALK, ON. DATE: 04/25/19 DRAWN: RCT PROJECT #: S130647 CHECKED: JMQ

StormTech 4640 TRUEMAN BLVD HILLIARD, OH 43026

SCALE = 1 : 100

SHEET 2 OF 5

ACCEPTABLE FILL MATERIALS: STORMTECH MC-3500 CHAMBER SYSTEMS

	MATERIAL LOCATION	DESCRIPTION	AASHTO MATERIAL CLASSIFICATIONS	COMPACTION / DENSITY REQUIREMENT
D	**FINAL FILL:** FILL MATERIAL FOR LAYER 'D' STARTS FROM THE TOP OF THE 'C' LAYER TO THE BOTTOM OF FLEXIBLE PAVEMENT OR UNPAVED FINISHED GRADE ABOVE. NOTE THAT PAVEMENT SUBBASE MAY BE PART OF THE 'D' LAYER	ANY SOIL/ROCK MATERIALS, NATIVE SOILS, OR PER ENGINEER'S PLANS. CHECK PLANS FOR PAVEMENT SUBGRADE REQUIREMENTS.	N/A	PREPARE PER SITE DESIGN ENGINEER'S PLANS. PAVED INSTALLATIONS MAY HAVE STRINGENT MATERIAL AND PREPARATION REQUIREMENTS.
C	**INITIAL FILL:** FILL MATERIAL FOR LAYER 'C' STARTS FROM THE TOP OF THE EMBEDMENT STONE ('B' LAYER) TO 24" (600 mm) ABOVE THE TOP OF THE CHAMBER. NOTE THAT PAVEMENT SUBBASE MAY BE A PART OF THE 'C' LAYER.	GRANULAR WELL-GRADED SOIL/AGGREGATE MIXTURES, <35% FINES OR PROCESSED AGGREGATE. MOST PAVEMENT SUBBASE MATERIALS CAN BE USED IN LIEU OF THIS LAYER.	AASHTO M145[1] A-1, A-2-4, A-3 OR AASHTO M43[1] 3, 357, 4, 467, 5, 56, 57, 6, 67, 68, 7, 78, 8, 89, 9, 10	BEGIN COMPACTIONS AFTER 24" (600 mm) OF MATERIAL OVER THE CHAMBERS IS REACHED. COMPACT ADDITIONAL LAYERS IN 12" (300 mm) MAX LIFTS TO A MIN. 95% PROCTOR DENSITY FOR WELL GRADED MATERIAL AND 95% RELATIVE DENSITY FOR PROCESSED AGGREGATE MATERIALS.
B	**EMBEDMENT STONE:** FILL SURROUNDING THE CHAMBERS FROM THE FOUNDATION STONE ('A' LAYER) TO THE 'C' LAYER ABOVE.	CLEAN, CRUSHED, ANGULAR STONE	AASHTO M43[1] 3, 4	NO COMPACTION REQUIRED.
A	**FOUNDATION STONE:** FILL BELOW CHAMBERS FROM THE SUBGRADE UP TO THE FOOT (BOTTOM) OF THE CHAMBER.	CLEAN, CRUSHED, ANGULAR STONE	AASHTO M43[1] 3, 4	PLATE COMPACT OR ROLL TO ACHIEVE A FLAT SURFACE.[2,3]

PLEASE NOTE:
1. THE LISTED AASHTO DESIGNATIONS ARE FOR GRADATIONS ONLY. THE STONE MUST ALSO BE CLEAN, CRUSHED, ANGULAR. FOR EXAMPLE, A SPECIFICATION FOR #4 STONE WOULD STATE: "CLEAN, CRUSHED, ANGULAR NO. 4 (AASHTO M43) STONE".
2. STORMTECH COMPACTION REQUIREMENTS ARE MET FOR 'A' LOCATION MATERIALS WHEN PLACED AND COMPACTED IN 9" (230 mm) (MAX) LIFTS USING TWO FULL COVERAGES WITH A VIBRATORY COMPACTOR.
3. WHERE INFILTRATION SURFACES MAY BE COMPROMISED BY COMPACTION, FOR STANDARD DESIGN LOAD CONDITIONS, A FLAT SURFACE MAY BE ACHIEVED BY RAKING OR DRAGGING WITHOUT COMPACTION EQUIPMENT. FOR SPECIAL LOAD DESIGNS, CONTACT STORMTECH FOR COMPACTION REQUIREMENTS.
4. ONCE LAYER 'C' IS PLACED, ANY SOIL/MATERIAL CAN BE PLACED IN LAYER 'D' UP TO THE FINISHED GRADE. MOST PAVEMENT SUBBASE SOILS CAN BE USED TO REPLACE THE MATERIAL REQUIREMENTS OF LAYER 'C' OR 'D' AT THE SITE DESIGN ENGINEER'S DISCRETION.

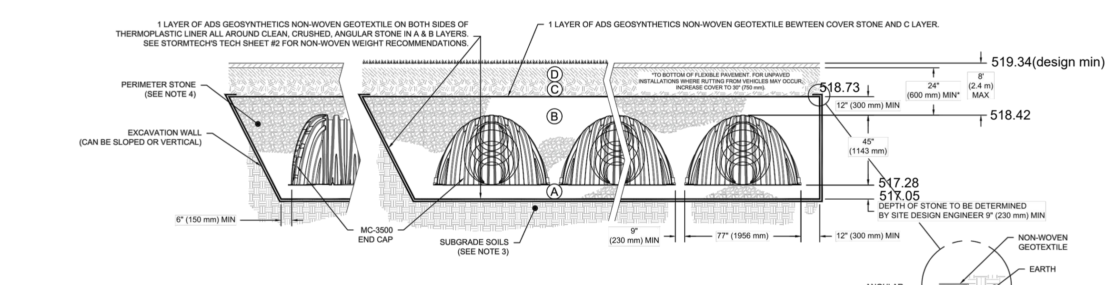

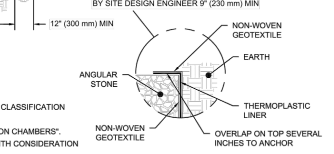

THERMOPLASTIC LINER DETAIL

NOTES:

1. CHAMBERS SHALL MEET THE REQUIREMENTS OF ASTM F2418-16a, "STANDARD SPECIFICATION FOR POLYPROPYLENE (PP) CORRUGATED WALL STORMWATER COLLECTION CHAMBERS" CHAMBER CLASSIFICATION 45x76 DESIGNATION SS.
2. MC-3500 CHAMBERS SHALL BE DESIGNED IN ACCORDANCE WITH ASTM F2787 "STANDARD PRACTICE FOR STRUCTURAL DESIGN OF THERMOPLASTIC CORRUGATED WALL STORMWATER COLLECTION CHAMBERS".
3. THE SITE DESIGN ENGINEER IS RESPONSIBLE FOR ASSESSING THE BEARING RESISTANCE (ALLOWABLE BEARING CAPACITY) OF THE SUBGRADE SOILS AND THE DEPTH OF FOUNDATION STONE WITH CONSIDERATION FOR THE RANGE OF EXPECTED SOIL MOISTURE CONDITIONS.
4. PERIMETER STONE MUST BE EXTENDED HORIZONTALLY TO THE EXCAVATION WALL FOR BOTH VERTICAL AND SLOPED EXCAVATION WALLS.
5. REQUIREMENTS FOR HANDLING AND INSTALLATION:
   - TO MAINTAIN THE WIDTH OF CHAMBERS DURING SHIPPING AND HANDLING, CHAMBERS SHALL HAVE INTEGRAL, INTERLOCKING STACKING LUGS.
   - TO ENSURE A SECURE JOINT DURING INSTALLATION AND BACKFILL, THE HEIGHT OF THE CHAMBER JOINT SHALL NOT BE LESS THAN 3".
   - TO ENSURE THE INTEGRITY OF THE ARCH SHAPE DURING INSTALLATION, a) THE ARCH STIFFNESS CONSTANT AS DEFINED IN SECTION 6.2.8 OF ASTM F2418 SHALL BE GREATER THAN OR EQUAL TO 500 LBS/IN/IN. AND b) TO RESIST CHAMBER DEFORMATION DURING INSTALLATION AT ELEVATED TEMPERATURES (ABOVE 73° F / 23° C), CHAMBERS SHALL BE PRODUCED FROM REFLECTIVE GOLD OR YELLOW COLORS.

SHEET 3 OF 5

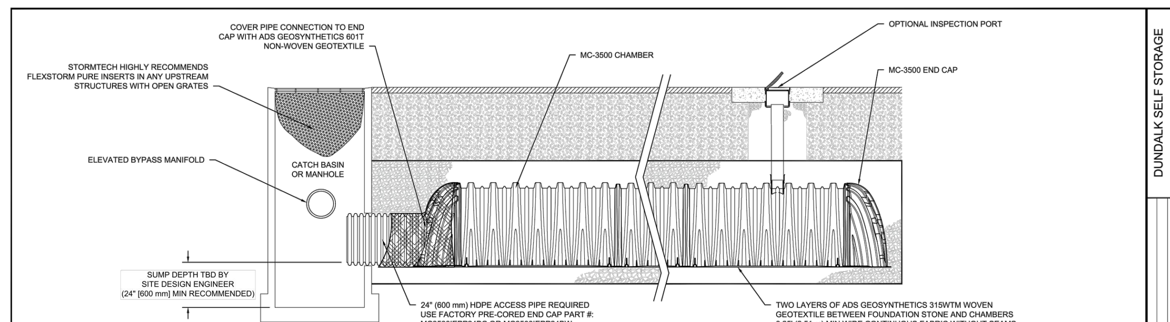

MC-3500 ISOLATOR ROW DETAIL
NTS

INSPECTION & MAINTENANCE

STEP 1) INSPECT ISOLATOR ROW FOR SEDIMENT
- A. INSPECTION PORTS (IF PRESENT)
  - A.1. REMOVE/OPEN LID ON NYLOPLAST INLINE DRAIN
  - A.2. REMOVE AND CLEAN FLEXSTORM FILTER IF INSTALLED
  - A.3. USING A FLASHLIGHT AND STADIA ROD, MEASURE DEPTH OF SEDIMENT AND RECORD ON MAINTENANCE LOG
  - A.4. LOWER A CAMERA INTO ISOLATOR ROW FOR VISUAL INSPECTION OF SEDIMENT LEVELS (OPTIONAL)
  - A.5. IF SEDIMENT IS AT, OR ABOVE, 3" (80 mm) PROCEED TO STEP 2. IF NOT, PROCEED TO STEP 3.
- B. ALL ISOLATOR ROWS
  - B.1. REMOVE COVER FROM STRUCTURE AT UPSTREAM END OF ISOLATOR ROW
  - B.2. USING A FLASHLIGHT, INSPECT DOWN THE ISOLATOR ROW THROUGH OUTLET PIPE
    - i) MIRRORS ON POLES OR CAMERAS MAY BE USED TO AVOID A CONFINED SPACE ENTRY
    - ii) FOLLOW OSHA REGULATIONS FOR CONFINED SPACE ENTRY IF ENTERING MANHOLE
  - B.3. IF SEDIMENT IS AT, OR ABOVE, 3" (80 mm) PROCEED TO STEP 2. IF NOT, PROCEED TO STEP 3.

STEP 2) CLEAN OUT ISOLATOR ROW USING THE JETVAC PROCESS
- A. A FIXED CULVERT CLEANING NOZZLE WITH REAR FACING SPREAD OF 45" (1.1 m) OR MORE IS PREFERRED
- B. APPLY MULTIPLE PASSES OF JETVAC UNTIL BACKFLUSH WATER IS CLEAN
- C. VACUUM STRUCTURE SUMP AS REQUIRED

STEP 3) REPLACE ALL COVERS, GRATES, FILTERS, AND LIDS; RECORD OBSERVATIONS AND ACTIONS.

STEP 4) INSPECT AND CLEAN BASINS AND MANHOLES UPSTREAM OF THE STORMTECH SYSTEM.

NOTES

1. INSPECT EVERY 6 MONTHS DURING THE FIRST YEAR OF OPERATION. ADJUST THE INSPECTION INTERVAL BASED ON PREVIOUS OBSERVATIONS OF SEDIMENT ACCUMULATION AND HIGH WATER ELEVATIONS.
2. CONDUCT JETTING AND VACTORING ANNUALLY OR WHEN INSPECTION SHOWS THAT MAINTENANCE IS NECESSARY.

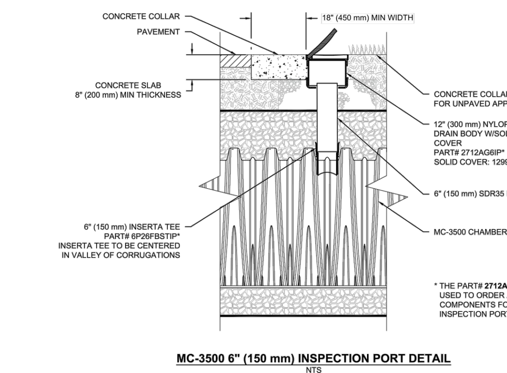

MC-3500 6" (150 mm) INSPECTION PORT DETAIL
NTS

SHEET 4 OF 5

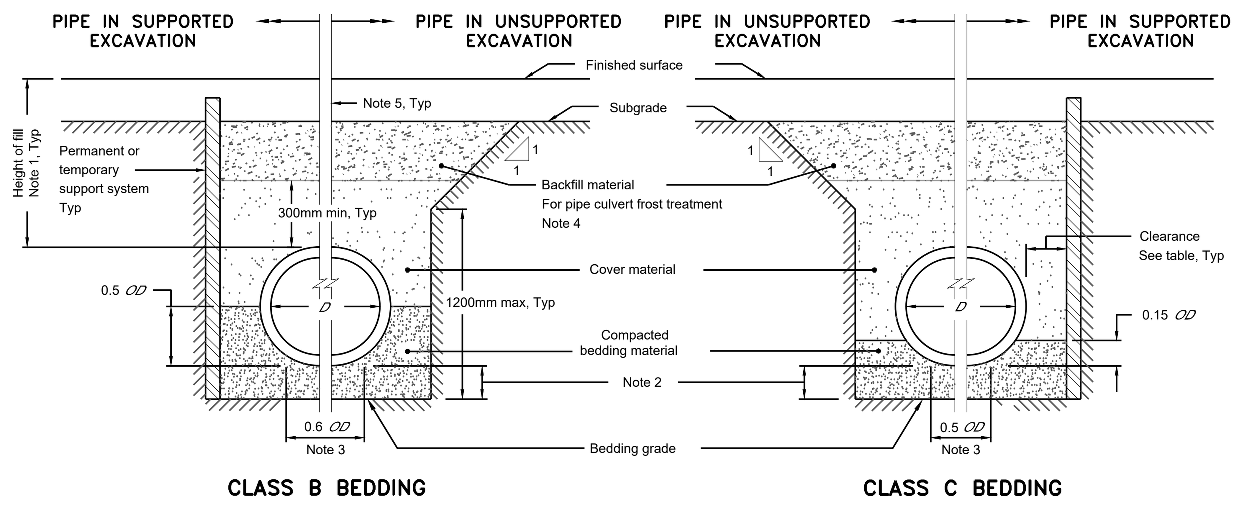

NOTES:
1. Height of fill is measured from the finished surface to top of pipe.
2. The minimum bedding depth below the pipe shall be 0.15D. In no case shall this dimension be less than 150mm or greater than 300mm.
3. The pipe bed shall be compacted and shaped to receive the bottom of the pipe.
4. Pipe culvert frost treatment shall be according to OPSD 803.030 and 803.031.
5. Condition of excavation is symmetrical about centreline of pipe.

A. Soil types as defined in the Occupational Health and Safety Act and Regulations for Construction Projects.
B. All dimensions are in metres unless otherwise shown.

LEGEND:
D – Inside diameter
OD – Outside diameter

CLEARANCE TABLE	
Pipe Inside Diameter mm	Clearance mm
900 or less	300
Over 900	500

ONTARIO PROVINCIAL STANDARD DRAWING — Nov 2015 — Rev 3
RIGID PIPE BEDDING, COVER, AND BACKFILL TYPE 1 OR 2 SOIL – EARTH EXCAVATION
OPSD 802.030

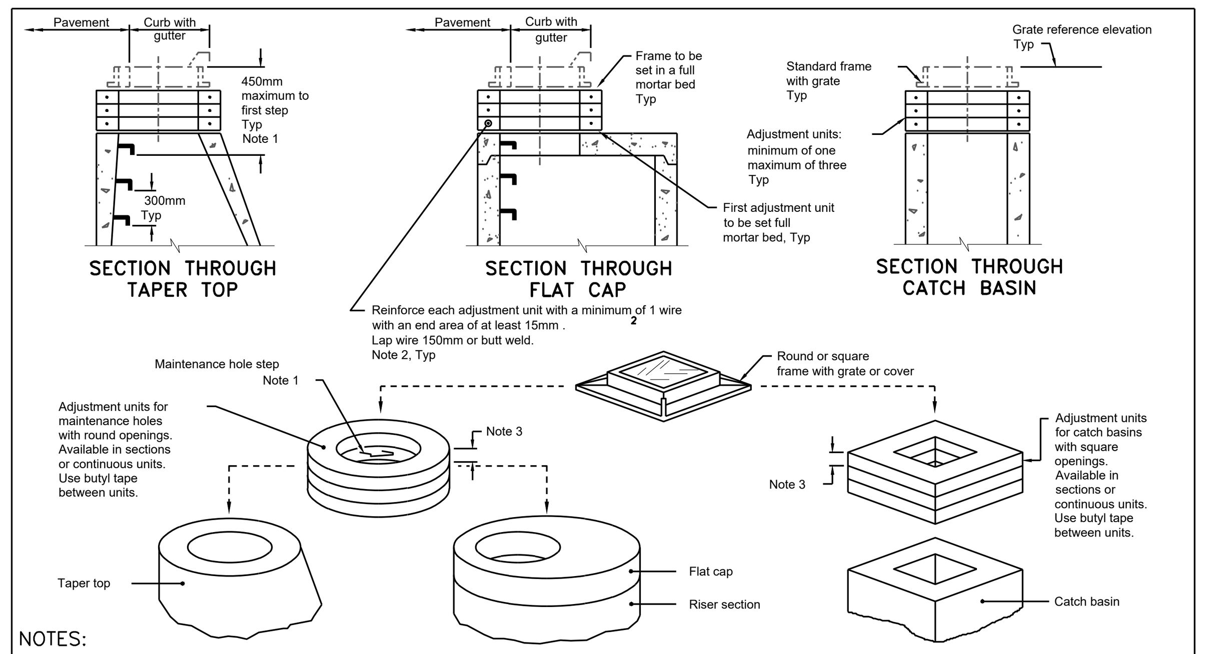

NOTES:
1. If first step is in an adjustment unit, the adjustment unit shall be of the type manufactured with a step in place.
2. Centre reinforcing in adjustment unit ±10mm.
3. Round and square adjustment units are available in sizes of 50, 75, 100, 150, and 300mm.

A. Adjustment units shall not extend beyond the outside edge of the structure.
B. All dimensions are in millimetres unless otherwise shown.

ONTARIO PROVINCIAL STANDARD DRAWING — Nov 2014 — Rev 3
PRECAST CONCRETE ADJUSTMENT UNITS FOR MAINTENANCE HOLES, CATCH BASINS, AND VALVE CHAMBERS
OPSD 704.010

ROYAL Building Products
www.royalbuildingproducts.com
Page 1 of 1
Issue Date: July 14, 2014

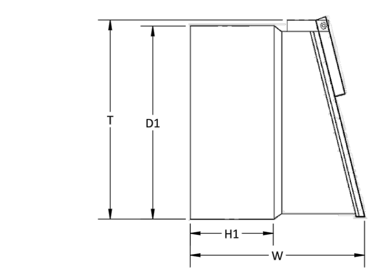

ASTM D2665, F1866, CSA B181.2 WHERE APPLICABLE

TERMINAL BACKWATER VALVE (H)
PVC SOLVENT WELD DWV

PART NO.	SIZE IN INCHES	H1	T	W	D1
D0204	4	2 1/4	5 27/32	7 1/16	5 1/32
D0206	6	3 1/4	8 1/32	---	7 7/32
D0208	8	4 1/4	10 5/32	---	9 11/32
D0210	10	5 3/8	12 11/32	---	11 17/32
D0212	12	6 3/8	14 13/32	---	13 19/32

-- DIMENSIONS AND APPEARANCE ARE APPROXIMATE AND SUBJECT TO CHANGE WITHOUT NOTICE DUE TO DESIGN OR PRODUCTION MODIFICATIONS
-- MOLDED FITTING TOLERANCE = ±1/8" OVERALL LENGTH
-- FABRICATED FITTING TOLERANCE = ±1" LINEAR, ± 2° ANGULAR

* MOLDED FITTING
† ASSEMBLED FROM MOLDED COMPONENTS ALL OTHER FITTINGS ARE FABRICATED

PLASTIC TRENDS FITTINGS — D02X.D01 CUT-SHEET

CDS — THIS PRODUCT MAY BE PROTECTED BY ONE OR MORE OF THE FOLLOWING U.S. PATENTS: 5,788,848; 6,641,720; 6,511,595; 6,581,783; RELATED FOREIGN PATENTS, OR OTHER PATENTS PENDING.

PLAN VIEW

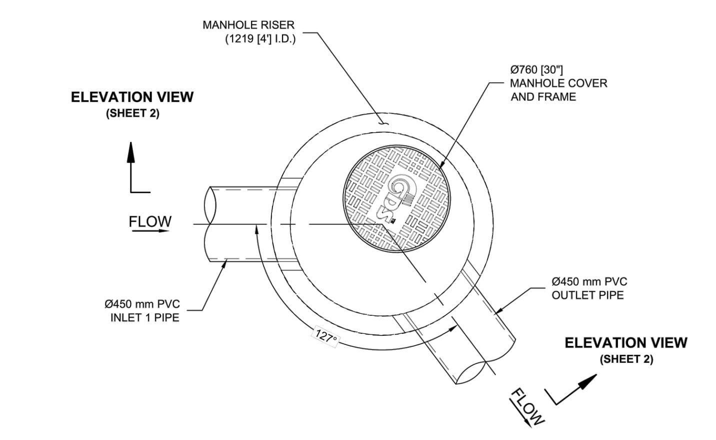

CDS MODEL PMSU2015-4-C,
0.7 CFS TREATMENT CAPACITY
STORM WATER TREATMENT UNIT

MCON — ALL UNITS IN mm UNLESS NOTED OTHERWISE.

CONTECH ENGINEERED SOLUTIONS LLC www.contechES.com 200 Enterprise Drive, Scarborough, ME 04074 877-907-8676 207-885-9830 207-885-9825 FAX

DUNDALK SELF STORAGE
772186 HIGHWAY 10
DUNDALK, ON
SITE DESIGNATION: OGS

JOB No.: XXXX-001 SCALE: 1:30 DATE: XX/XX/XX SHEET: 1 DRAWN: XX APPROV.:

Echelon Environmental, 505 Hood Road, Unit 26, Markham, Ontario L3R 5V6 Tel: (905) 948-0000 Fax: (905) 948-0577

ELEVATION VIEW

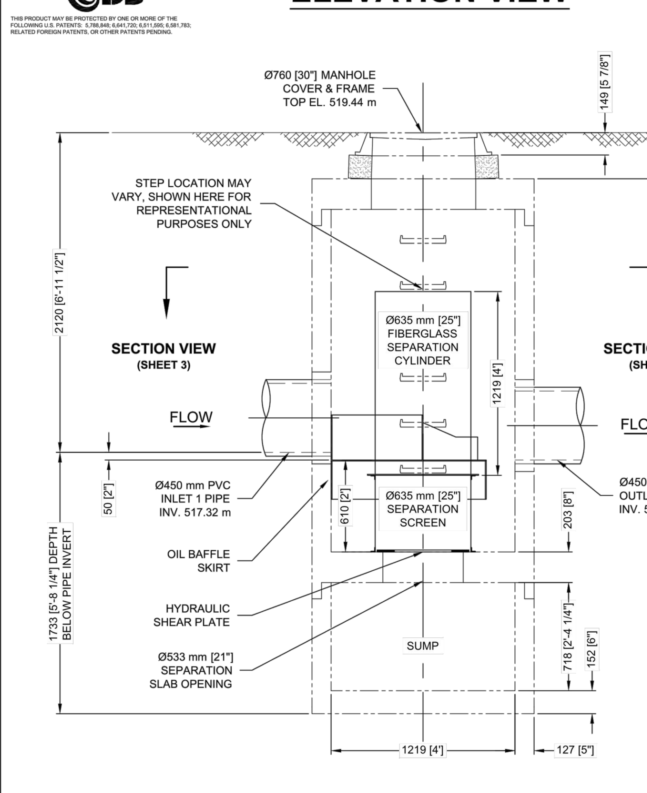

INSERT
PVC HYDRAULIC SHEAR PLATE

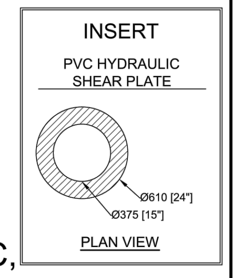

PLAN VIEW

NOTE: CONTRACTOR TO FIELD VERIFY DIMENSIONS OF CONCRETE SECTIONS

CDS MODEL PMSU2015-4-C,
0.7 CFS TREATMENT CAPACITY
STORM WATER TREATMENT UNIT

MCON — ALL UNITS IN mm UNLESS NOTED OTHERWISE.

CONTECH ENGINEERED SOLUTIONS LLC www.contechES.com 200 Enterprise Drive, Scarborough, ME 04074 877-907-8676 207-885-9830 207-885-9825 FAX

DUNDALK SELF STORAGE
772186 HIGHWAY 10
DUNDALK, ON
SITE DESIGNATION: OGS

JOB No.: XXXX-001 SCALE: 1:30 DATE: XX/XX/XX SHEET: 2 DRAWN: XX APPROV.:

Echelon Environmental, 505 Hood Road, Unit 26, Markham, Ontario L3R 5V6 Tel: (905) 948-0000 Fax: (905) 948-0577

OGS ALTERNATIVE #1

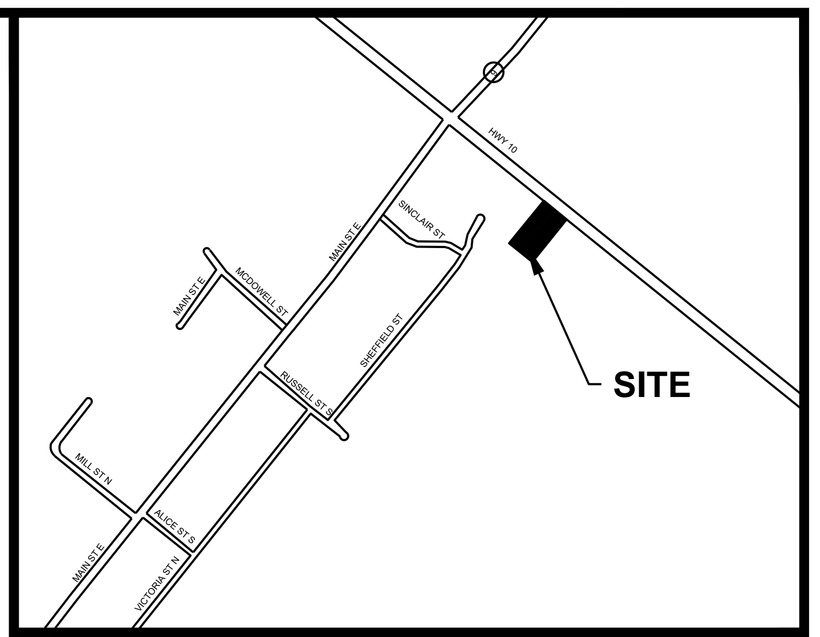

KEY MAP
N.T.S.

LEGEND

SCHEDULE OF REVISIONS

NO.	DATE	DESCRIPTION	CHECKED
1.	2018 07 19	INITIAL CONCEPT PLAN	
2.	2019 10 17	1ST SUBMISSION SITE PLAN APPROVAL	BWB
3.	2019 10 31	ENTRANCE REVISED PER MTO	BWB

DUNDALK SELF STORAGE
772186 HIGHWAY 10
DUNDALK
TWP OF SOUTHGATE

NOTES AND DETAILS

PROJECT NO. 18-3142		DRWG NO. 3142-DET3	
DATE: APRIL 2019		SCALE: NTS	
DRAWN: NDK/BWB	CHECKED:	APPROVED:	

Skelton Brumwell & Associates Inc.
ENGINEERING PLANNING ENVIRONMENTAL CONSULTANTS

93 BELL FARM ROAD, SUITE 107
BARRIE, ONTARIO L4M 5G1
www.skeltonbrumwell.ca
TELEPHONE (705) 726-1141
FAX (705) 726-0331
TOLL FREE (877) 726-1141

Copyright © 2018 Skelton Brumwell & Associates Inc. All rights reserved.
This document is protected by copyright laws and may not be reproduced in any manner, or for any purpose, except with the written permission of the copyright holder.