65'x80' WORKSHOP

MAYNARD AND VERA SHANTZ

123812 SOUTHGATE ROAD 12
HOLSTEIN, ONTARIO. N0C 2A0

INSPECTION SCHEDULE ***CALL IN WEA 519-323-1527 TO SCHEDULE AN INSPECTION***

1. FOOTINGS: WHEN THE CONCRETE FORM WORK AND REINFORCING STEEL HAVE BEEN SET FOR THE PLACEMENT OF THE FOOTINGS. THE SUB GRADE WILL ALSO BE INSPECTED FOR THE REQUIRED BEARING CAPACITY.
2. WALLS: WHEN THE CONCRETE FORM WORK AND REINFORCING STEEL HAVE BEEN SET FOR THE PLACEMENT OF THE WALLS.
3. WOOD/STEEL FRAMING
4. FINAL REVIEW: WHEN ALL THE STRUCTURAL COMPONENTS OF THE FACILITY HAVE BEEN COMPLETED.

SHEET SCHEDULE

TAG	DESCRIPTION	TAG	DESCRIPTION		
00	COVER SHEET	S3	SECTION "A" (BUILDING SECTION)	S8	STRUCTURAL DETAILS #4
SP1	ENLARGED SITE PLAN	S4	OFFICE DETAILS	S9	UNIVERSAL WASHROOM
N1	GENERAL NOTES + O.B.C.	S5	STRUCTURAL DETAILS #1	S10	SOUTH ELEVATION + WEST ELEVATION
S1	FOUNDATION PLAN	S6	STRUCTURAL DETAILS #2	S11	NORTH ELEVATION + EAST ELEVATION
S2	FLOOR PLAN	S7	STRUCTURAL DETAILS #3	S12	RENDERS

This document and all associated documents may not be used, reproduced or modified in any manner or for any purpose. H.Bye Engineering accepts no liability to any party that relies on these documents without the written consent of H.Bye Engineering.

ISSUED FOR PERMIT APPLICATION ONLY

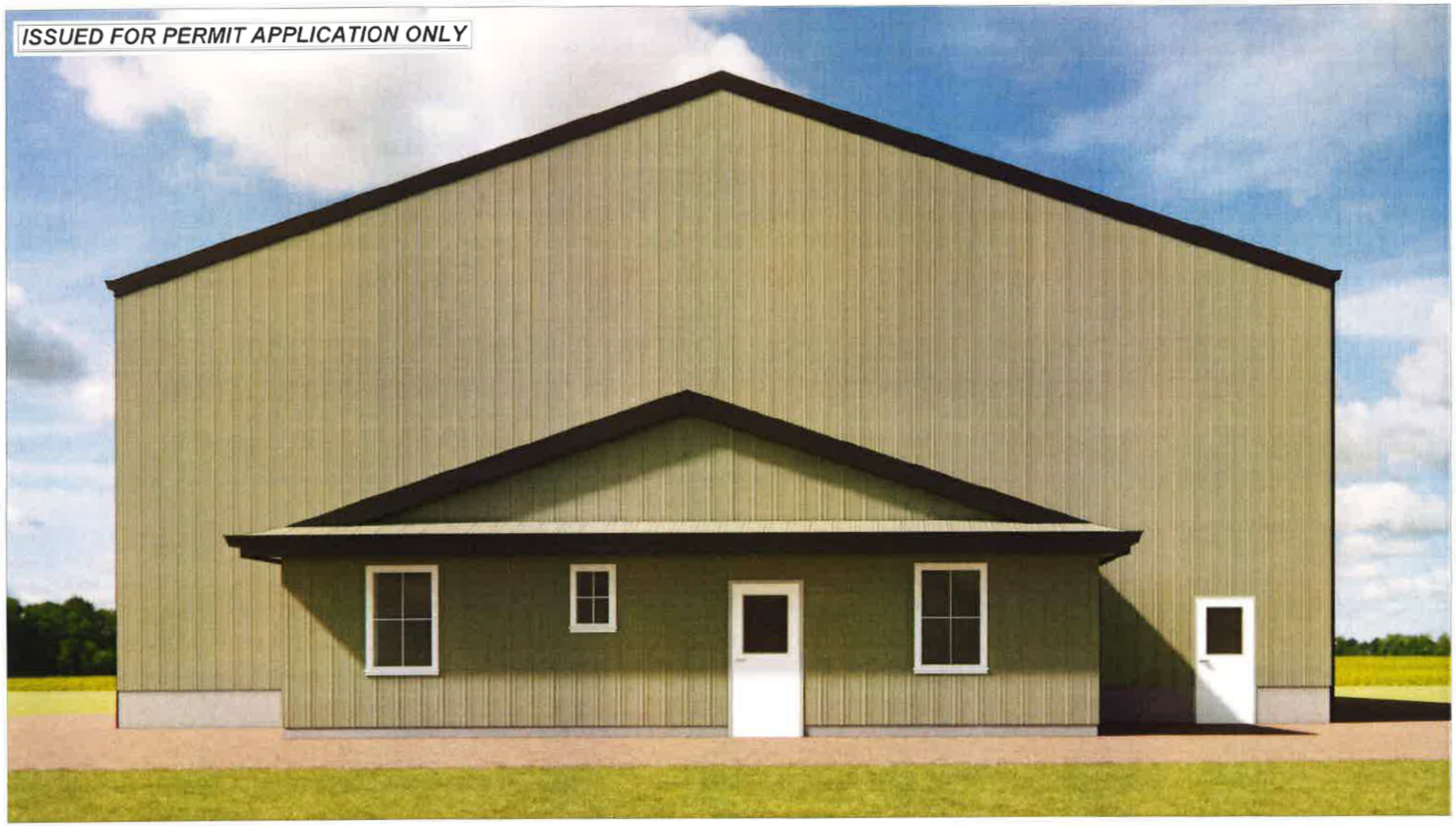

[redacted]

Sept. 10, 2025
PROVINCE OF ONTARIO

DRAWING REVISIONS

No.	DATE	REVISION	BY	APPVD

DRAWING RELEASE

DATE	ISSUE	BY	APPVD
SEPT. 6, 2025	FOR PERMIT	R.M.M.	H.B.

ENGINEER:

H.BYE ENGINEERING
MOUNT FOREST
519-323-1527
Since 2017

OWNER:
MAYNARD AND VERA SHANTZ
123812 SOUTHGATE ROAD 12
HOLSTEIN, ONTARIO N0G 2A0

PROJECT NAME / LOCATION:
65'x80' WORKSHOP
123812 SOUTHGATE ROAD 12
HOLSTEIN, ONTARIO N0G 2A0

SHEET TITLE:
COVER SHEET

DWG FILE	2025.131 - Maynard and Vera Shantz - New Work.Dwg		
DRAWN BY	RMM	JOB#	2025.131
CHECKED BY	H.B.		00
REVISION	N/A		
DATE	SEPT. 6, 2025		
SCALE	AS NOTED		

SHEET SIZE = 17" x 11" - DO NOT SCALE DRAWINGS

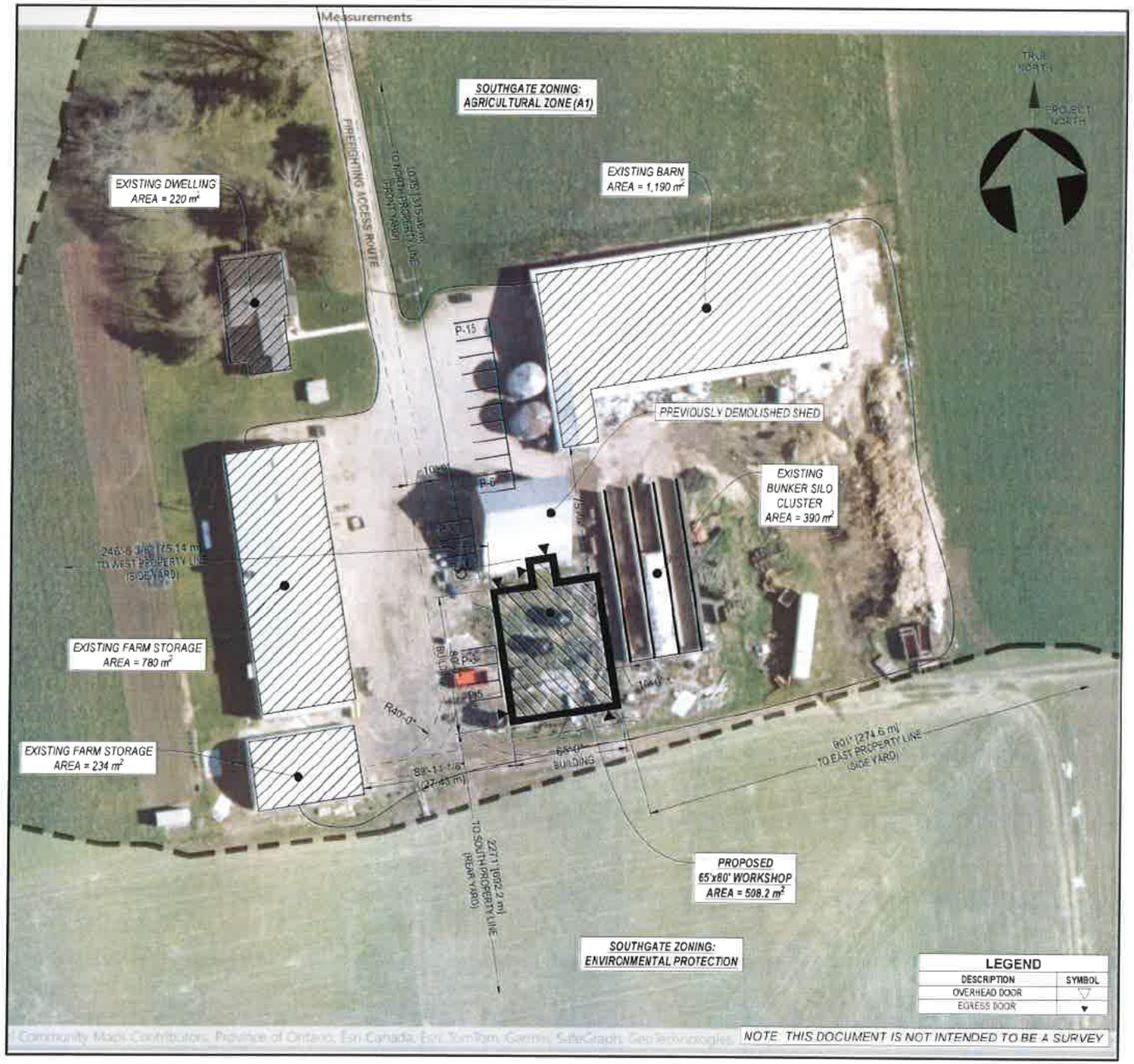

ENLARGED SITE PLAN
SCALE 1/128" = 1'-0"

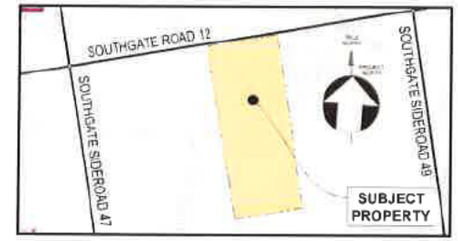

KEY PLAN
SCALE 1"=2,500'

PARCEL DESCRIPTION

ARN	420706000400300
MUNICIPALITY	Township of Southgate
PRIMARY ADDRESS	123812 SOUTHGATE ROAD 12
LEGAL DESCRIPTION	CON 11 LOT 8
ZONING	Agricultural Zone (A1)

Section 6: Agricultural Zone (A1)
(Township of Southgate Zoning By-Law 19-2002)

	DESCRIPTION	MINIMUM MAXIMUM ZONING REQUIREMENTS	PROVIDED
6.1	PERMITTED USES	Uses buildings or structures accessory to a permitted use	COMPLIES
6.2 a)	REGULATIONS - Minimum Lot Area	40 hectares	41.97 ha
6.2 b)	REGULATIONS - Minimum Lot Frontage	200 metres	414.91 m
6.2 c)	REGULATIONS - Maximum Lot Coverage	7 per cent	0.6754% (2,833 m²)
6.2 d)	REGULATIONS - Minimum Front Yard	20 metres except that the minimum front yard for an agricultural building and/or Temporary farm dwelling Accommodation shall be 42 metres	315.4 m
6.2 e)	REGULATIONS - Minimum Side Yard	15 metres except that a minimum side yard abutting an improved public street shall be 20 metres	EAST 274.6 m WEST 75.14 m
6.2 f)	REGULATIONS - Minimum Rear Yard	15 metres	592.2 m

3.2.5.5. LOCATIONOF ACCESS ROUTES (OBC 2024)

1. Access routes for firefighting shall be located so that the principal entrance is located not less than 3 m (9'-10") and not more than 15 m (49'-3") from the closest portion of the access route required for fire department use, measured horizontally from the face of the building.
2. Access routes shall be provided to a building so that
   - 2.1. for a building provided with a fire department connection, a fire department pumper vehicle can be located adjacent to the hydrants referred to in Article 3.2.5.16., 2.b.
   - 2.2. for a building not provided with a fire department connection, a fire department pumper vehicle can be located so that the length of the access route from a hydrant to the vehicle plus the unobstructed path of travel for the firefighter from the vehicle to the building is not more than 90 m (295'-3"), and
   - 2.3. the unobstructed path of travel for the firefighter from the vehicle to the building is not more than 45 m (147'-8").
3. The unobstructed path of travel for the firefighter required by Sentence (2) from the vehicle to the building shall be measured from the vehicle to the fire department connection provided for the building, except that if no fire department connection is provided, the path of travel shall be measured to the principal entrance of the building.
4. If a portion of a building is completely cut off from the remainder of the building so that there is no access to the remainder of the building, the access routes required by Sentence (2) shall be located so that the unobstructed path of travel from the vehicle to one entrance of each portion of the building is not more than 45 m (147'-8").

3.2.5.6 ACCESS ROUTE DESIGN (OBC 2024)

1. A portion of a roadway or yard provided as a required access route for fire department use shall,
   - 1.1. have a clear width not less than 6 m, unless it can be shown that lesser widths are satisfactory
   - 1.2. have a centreline radius not less than 12 m,
   - 1.3. have an overhead clearance not less than 5 m
   - 1.4. have a change of gradient not more than 1 in 12.5 over a minimum distance of 15 m
   - 1.5. be designed to support the expected loads imposed by firefighting equipment and be surfaced with concrete, asphalt or other material designed to permit accessibility under all climatic conditions
   - 1.6. have turnaround facilities for any dead-end portion of the access route more than 90 m long, and
   - 1.7. be connected with a public thoroughfare.

This document and all associated documents may not be used, reproduced or modified in any manner or for any purpose. H.Bye Engineering accepts no liability to any party that relies on these documents without the written consent of H.Bye Engineering.

[redacted]
Sept. 10, 2025
PROVINCE OF ONTARIO

DRAWING REVISIONS

No.	DATE	REVISION	BY	APPVD

DRAWING RELEASE

DATE	ISSUE	BY	APPVD
SEPT. 5 2025	FOR PERMIT	R.M.M.	H.B.

ENGINEER:
H.BYE ENGINEERING
MOUNT FOREST
519-323-1527
Since 2017

OWNER:
MAYNARD AND VERA SHANTZ
123812 SOUTHGATE ROAD 12
HOLSTEIN, ONTARIO N0G 2A0

PROJECT NAME / LOCATION:
65'x80' WORKSHOP
123812 SOUTHGATE ROAD 12
HOLSTEIN, ONTARIO N0G 2A0

SHEET TITLE:
ENLARGED SITE PLAN

DWG FILE	2025-131 - Maynard and Vera Shantz - New Work Shop		
DRAWN BY	R.Z.	JOB#	2025-131
CHECKED BY	H.B.		
REVISION	N/A		
DATE	SEPT. 6, 2025		
SCALE	AS NOTED		

SP1

SHEET SIZE = 17" x 11" - DO NOT SCALE DRAWINGS

GENERAL NOTES:

DESIGN PARAMETERS: OBC 2024 - PART 9

1. ALL WORK ON THIS PROJECT SHALL CONFORM TO THE ONTARIO BUILDING CODE AND THE OCCUPATIONAL HEALTH AND SAFETY ACT.
2. OWNER & GENERAL CONTRACTOR TO VERIFY ALL DIMENSIONS. SITE CONDITIONS PRIOR TO CONSTRUCTION. NOTIFY ENGINEER OF ANY DISCREPANCIES.
3. DRAWINGS ARE NOT TO BE SCALED.
4. GENERAL REVIEW OF THE CONSTRUCTION MUST BE COMPLETED BY THE TOWNSHIP BUILDING OFFICIAL(S) OR A LICENSED PROFESSIONAL ENGINEER OR BOTH. ALL ENGINEERING REPORTS, IF REQUESTED BY THE TOWNSHIP, ARE TO BE FORWARDED TO THE BUILDING DEPARTMENT. INSPECTIONS MAY INCLUDE BUT ARE NOT LIMITED TO;
   - 4.1. FOOTINGS AND WALLS (PRIOR TO POURING)
   - 4.2. CONCRETE REINFORCING (PRIOR TO POURING)
   - 4.3. STRUCTURAL STEEL

SOIL/SUBGRADE SPECIFICATIONS

1. PREPARE THE AREA FOR THE PROPOSED STRUCTURE BY REMOVING ALL TOPSOIL & ORGANIC MATERIAL FROM THE AREA OF THE FOUNDATION.
2. ENSURE MIN. 24" OF FREE DRAINING COMPACTED GRANULARS UNDER CONCRETE SLABS TO PREVENT UNEQUAL FROST HEAVE.
3. IF ANY "SOFT AREAS" OR SOIL THAT IS NOT NATIVE IS ENCOUNTERED DURING EXCAVATION IT IS TO BE SUB EXCAVATED, REMOVED,FILLED WITH GRANULAR AND COMPACTED
4. DO NOT ALLOW SOIL TO FREEZE AND FROST TO DEVELOP UNDER ANY FOOTINGS OR FLOATING SLABS.

CONCRETE SPECIFICATIONS

1. ALL CONCRETE CONSTRUCTION IS TO CONFORM TO CAN/CSA-A 23.1, 23.2, AND 23.3.
2. ALL CONCRETE DESIGN IS TO CONFORM TO CAN/CSA-A23.3.
3. CONCRETE USES SHALL HAVE THE FOLLOWING CLASSES AND ASSOCIATED PHYSICAL PROPERTIES:

LOCATION	CLASS	COMP STRENGTH AT 27 DAYS	W/C RATIO	AIR ENTRAINMENT
EXTERIOR STRUCTURALLY REINFORCED SLABS	C-1	35 MPa	0.40	5% - 8%
EXTERIOR UNREINFORCED SLABS ON GRADE, CURBS	C-2	32 MPa	0.45	5% - 8%
EXTERIOR WALLS, COLUMNS OR PIERS	F-2	25 MPa	0.55	4% - 7%
INTERIOR FLOOR SLABS	N-1	25 MPa	0.55	4% - 7%
FOOTINGS	N-2	20 MPa	0.55	NOT REQ'D

4. KEEP CONCRETE FROM RAPIDLY LOSING MOISTURE. CONCRETE SHOULD BE KEPT MOIST DURING THE FIRST THREE DAYS OF CURING.
5. DO NOT ALLOW CONCRETE TO FREEZE FOR A MINIMUM OF 10 DAYS AFTER PLACEMENT.
6. INSTALL CONTROL JOINTS AT A SPACING OF 20 TIMES THE AVERAGE WALL THICKNESS. IN BOTH SIDES OF ALL WALLS. DO NOT CUT REBAR.
7. CALCIUM CHLORIDE OR ANY ADMIXTURE CONTAINING CALCIUM IS NOT TO BE USED IN CONCRETE.
8. CUT CONCRETE SLAB A MIN. OF 20 TIMES THE SLAB THICKESS ONE DAY AFTER POURING. CUT 1/4 OF SLAB THICKNESS. DO NOT CUT REINFORCING STEEL.

REBAR SPECIFICATIONS

1. ALL REBAR TO BE GRADE 400.
2. ALL REBAR BEND DIAMETERS SHALL CONFORM TO CAN/CSA-A23.1. REBAR BENDING SHALL NOT COMPROMISE THE REBAR IN ANYWAY.
3. REBAR SPLICE LENGTHS:
   - 10M BARS = 18" (450mm) MIN.
   - 15M BARS = 24" (600mm) MIN.
   - 20M BARS = 30" (750mm) MIN.
   - 25M BARS = 48" (1200mm) MIN.
4. REBAR CONCRETE COVER:
   - 4.1. 1 1/2" (40mm) FOR CONCRETE PLACED IN FORMWORK FOR 15M OR SMALLER
   - 4.2. 2" (50mm) FOR CONCRETE PLACED IN FORMWORK FOR 20M OR LARGER
   - 4.3. 2 1/2" (65mm) FOR SLAB ON GRADE. TOP OF SLAB TO TOP LAYER OF STEEL
   - 4.4. 3" (75mm) FOR CONCRETE PLACED AGAINST THE EARTH (BOTTOM OF FOOTINGS)

WOOD SPECIFICATIONS

1. FRAMED WALLS ARE TO BE WIND BRACED AT ALL CORNERS IN BOTH DIRECTIONS.
2. LUMBER SHALL BE SPF No. 1/2 OR BETTER UNLESS NOTED OTHERWISE. MOISTURE CONTENT SHALL BE 19% OR LESS.
3. LUMBER SHALL NOT BE NOTCHED OR DRILLED IN THE FIELD.
4. WOOD IS NOT PERMITTED TO BEAR DIRECTLY ON MASONRY OR CONCRETE WITHOUT BEING PRESSURE TREATED.
5. PROVIDE SOLID WOOD HORIZONTAL BLOCKING AT MAXIMUM 1.2m (48") O.C. FOR ALL FRAMED WALLS.
6. ALL NAILS USED SHALL CONFORM TO STEEL WIRE NAILS AND SPIKES AS DEFINED IN CSA STANDARD B111 "WIRE NAILS, SPIKES AND STAPLES" UNLESS NOTED OTHERWISE.
7. ALL NAILS AND FASTENERS IN CONTACT WITH PRESSURE TREATED WOOD ARE TO BE HOT DIP GALVANIZED (TO CSA-G164) OR STAINLESS STEEL.
8. ALL WOOD FRAMING, BOTH DESIGN AND CONSTRUCTION, IS TO CONFORM TO: CAN/CSA-086 -19 - "ENGINEERING DESIGN IN WOOD".

STRUCTURAL STEEL NOTES:

1. ALL STRUCTURAL STEEL FRAMING SHALL BE COMPLETED BY AN EXPERIENCED ERECTOR
2. ALL STRUCTURAL STEEL BEAMS AND COLUMNS SHALL CONFORM TO CAN/CSA G40.21 GRADE 350W UNLESS NOTED OTHERWISE
3. ALL STRUCTURAL STEEL CHANNELS AND ANGLES SHALL CONFORM TO CAN/CSA G40.21 GRADE 300W UNLESS NOTED OTHERWISE
4. ALL HSS SHALL CONFORM TO CAN/CSA G40.21 GRADE 350W (CLASS C) UNLESS NOTED OTHERWISE
5. ALL STEEL PLATE TO BE A36 (250W MPa) MATERIAL (MIN.)
6. ALL STRUCTURAL STEEL SHALL BE NEW MATERIAL UNLESS APPROVED BY THE DESIGN ENGINEER.
7. STRUCTURAL STEEL MEMBERS SHALL NOT BE SPLICED WITHOUT THE WRITTEN APPROVAL OF THE DESIGN ENGINEER.
8. WELDING SHALL CONFORM TO CSA W47.1 AND CSA W59. BY THE CANADIAN WELDING BUREAU. ALL WELDING SHALL BE COMPLETED BY CWB CERTIFIED WELDERS.
9. IN STRUCTURAL DRAWINGS "FULLY WELDED" REFERS TO MIN. 1/4" FILLET WELD. FULL DEPTH, ENTIRE PERIMETER
10. BOLTED CONNECTIONS SHALL BE MADE USING A325 BOLTS UNLESS NOTED OTHERWISE.
11. ANCHOR BOLTS SHALL CONFORM TO ASTM F1554 GRADE 36 MATERIAL UNLESS NOTED OTHERWISE
12. STRUCTURAL STEEL SHALL BE INSTALLED PLUMB AND LEVEL WITHIN TOLERANCES OUTLINED IN CSA S16-09 DESIGN OF STEEL STRUCTURES, SECTION 29.3 (ERECTION TOLERANCES)
13. ALL STRUCTURAL STEEL TO RECEIVE ONE COAT OF SHOP PRIMER. TOUCH-UP AS REQUIRED.
14. EXTERIOR STRUCTURAL STEEL SHALL BE PROTECTED FROM CORROSION BY PRIMING + PAINTING WITH EPOXY BASED EXTERIOR GRADE PAINT
15. ANY AND ALL STRUCTURAL STEEL ELEMENTS, REGARDING BOTH DESIGN AND CONSTRUCTION, ARE TO CONFORM TO CAN/CSA-S16 19 "DESIGN OF STEEL STRUCTURES"

DESIGN PARAMETERS:

ALL WIND AND SNOW LOADING AND THE RESULTING REACTION FORCES. FOUND ON PROTON WELDING AND FABRICATION SHOP DRAWINGS:

DATE: AUGUST 30, 2025.
PROJECT: MYNARD SHANTZ
QUOTATION No.: *P25072401*

NOTE: THIS BUILDING HOUSES TWO 10 TON OVERHEAD CRANES REFER TO GREYSIDE IND INC P25072401 DRAWINGS

ONTARIO BUILDING CODE DATA MATRIX PART 3 & 9

			BUILDING CODE PART 3 ☐	BUILDING CODE PART 9 ☒
1	PROJECT TYPE	☒ NEW ☐ ADDITION ☐ ADDITION AND RENOVATION ☐ CHANGE OF USE ☐ RENOVATION ☐ ALTERATION DESCRIPTION		2.1.1 9.10.1.3
2	MAJOR OCCUPANCY CLASSIFICATION	OCCUPANCY: F2 - MEDIUM HAZARD INDUSTRIAL	3.1.2.1. (1)	9.10.2
3	BUILDING AREA (m²)	EXISTING: – NEW: 508.2 m² EXISTING TO DEMOLISH: TOTAL: 508.2 m²	1.1.3.2	1.1.3.2
4	GROSS AREA (m²)	EXISTING: – NEW: 508.2 m² EXISTING TO DEMOLISH: TOTAL: 508.2 m²	1.1.3.2	1.1.3.2
5	NUMBER OF STOREYS	ABOVE GRADE: 1 BELOW GRADE:	3.2.1.1 & 1.1.3.2	2.1.1.3
6	BUILDING HEIGHT (m)	7.32 m		2.1.1.3
7	NUMBER OF STREETS/ FIREFIGHTER ACCESS	1 STREET(S)	3.2.2.10 & 3.2.5.5	
8	BUILDING CLASIFICATION		3.2.2.20-.83	9.10.4
9	SPRINKLER SYSTEM	☐ REQUIRED ☒ NOT REQUIRED PROPOSED ☐ ENTIRE BUILDING ☐ SELECTED COMPARTMENTS ☐ BASEMENT ☐ SELECTED FLOOR AREAS ☐ IN LIEU OF ROOF RATING ☐ NONE	3.2.2.20-.83 3.2.1.5 3.2.2.17	9.10.8
10	STANDPIPE REQUIRED	☐ YES ☒ NO	3.2.9	
11	FIRE ALARM SYSTEM	☐ REQUIRED ☒ NOT REQUIRED PROPOSED ☐ SINGLE STAGE ☐ TWO STAGE ☐ NONE	3.2.4	9.10.7.2
12	WATER SERVICE / SUPPLY IS ADEQUATE	☒ YES ☐ NO DESCRIPTION		
13	IMPORTANCE CATEGORY	☒ LOW ☐ LOW HUMAN OCCUPANCY ☐ NORMAL ☐ POST-DISASTER SHELTER ☐ HIGH ☐ WHP STORAGE BUILDING ☐ POST-DISASTER ☐ EXPLOSIVE OR HAZARDOUS SUBSTANCES	3.2.6	4.1.2.1.(3) & 4.1.2.1.B
14	CONSTRUCTION TYPE	RESTRICTION ☒ COMBUSTIBLE PERMITTED ☐ NON-COMBUSTIBLE REQUIRED ACTUAL ☐ COMBUSTIBLE ☐ NON-COMBUSTIBLE ☒ COMBINATION	3.2.2.20-.83	9.10.6
15	MEZZANNINE AREA (m²)	EXISTING: NEW: N/A EXISTING TO DEMOLISH: TOTAL: N/A	3.2.1.1.(3)-(8)	9.10.4.1
16	OCCUPANT LOAD	BASED ON ☐ m²/PERSON ☒ DESIGN OF BUILDING POSTED MAXIMUM OCCUPANT LOAD: 7 (SEVEN)	3.1.1.6	9.9.1.3
17	BARRIER-FREE DESIGN	☒ YES ☐ NO EXPLANATION	3.8	9.5.2
18	HAZARDOUS SUBSTANCES	☐ YES ☒ NO EXPLANATION	3.3.1.2.(1) & 3.3.1.19.(1)	9.10.1.3
19	REQUIRED FIRE RESISTANCE RATINGS	H.A. (H) (H) FLOORS 0 0 ☐ YES ☐ NO ☒ N/A MEZZANINE 0 0 ☐ YES ☐ NO ☒ N/A ROOF 0 0 ☐ YES ☐ NO ☒ N/A	3.2.2.20-.83 & 3.2.1.4	9.10.8 9.10.9
20	SPATIAL SEPARATION WALL	NORTH 40 23 3.0 100 <100 – SOUTH 144 692 2.7 100 <100 – EAST 178 274 3.3 100 <100 – WEST 178 27.5 3.3 100 <100 –	3.2.3.	9.10.14
21	PLUMBING FIXTURE REQUIREMENTS	NUMBER OF MEN = 6 NUMBER OF WOMAN = 1 MINIMUM AMOUNT OF WATER CLOSETS FOR MEN: 1 MINIMUM AMOUNT OF WATER CLOSETS FOR WOMAN: 1 TOTAL AMOUNT OF WATER CLOSETS PROVIDED: 1		9.31. & 3.7.4.
22	ENERGY EFFICIENCY	COMPLIANCE PATH THIS BUILDING CONSUMES LESS THAN 12W/M2 UNDER PEAK CONDITIONS, SB10, DIVISION 3, CLAUSE 1.2.1.2. (2)(a) THIS BUILDING IS NOT DESIGNED TO BE ABOVE 10 C, SB10, DIVISION 3, CLAUSE 1.2.1.1. (2)(b)		12.2.1.

This document and all associated documents may not be used, reproduced or modified in any manner or for any purpose. H.Bye Engineering accepts no liability to any party that relies on these documents without the written consent of H.Bye Engineering.

[redacted]

Sept. 10, 2025
PROVINCE OF ONTARIO

DRAWING REVISIONS

No.	DATE	REVISION	BY	APPV'D

DRAWING RELEASE

DATE	ISSUE	BY	APPV'D
SEPT. 9, 2025	FOR PERMIT	R.M.M.	H.B.

ENGINEER:
H.BYE ENGINEERING
MOUNT FOREST
519-323-1527
Since 2017

OWNER:
MAYNARD AND VERA SHANTZ
123812 SOUTHGATE ROAD 12
HOLSTEIN, ONTARIO N0G 2A0

PROJECT NAME / LOCATION:
65'x80' WORKSHOP
123812 SOUTHGATE ROAD 12
HOLSTEIN, ONTARIO N0G 2A0

SHEET TITLE:
GENERAL NOTES + OBC

SHEET SIZE = 17" x 11" - DO NOT SCALE DRAWINGS

DWG FILE	2025131 - Maynard and Vera Shantz - New Work.Dwg		
DRAWN BY	R.M.M.	JOB#	2025.131
CHECKED BY	H.B.		N1
REVISION	N/A		
DATE	SEPT. 9, 2025		
SCALE	AS NOTED		

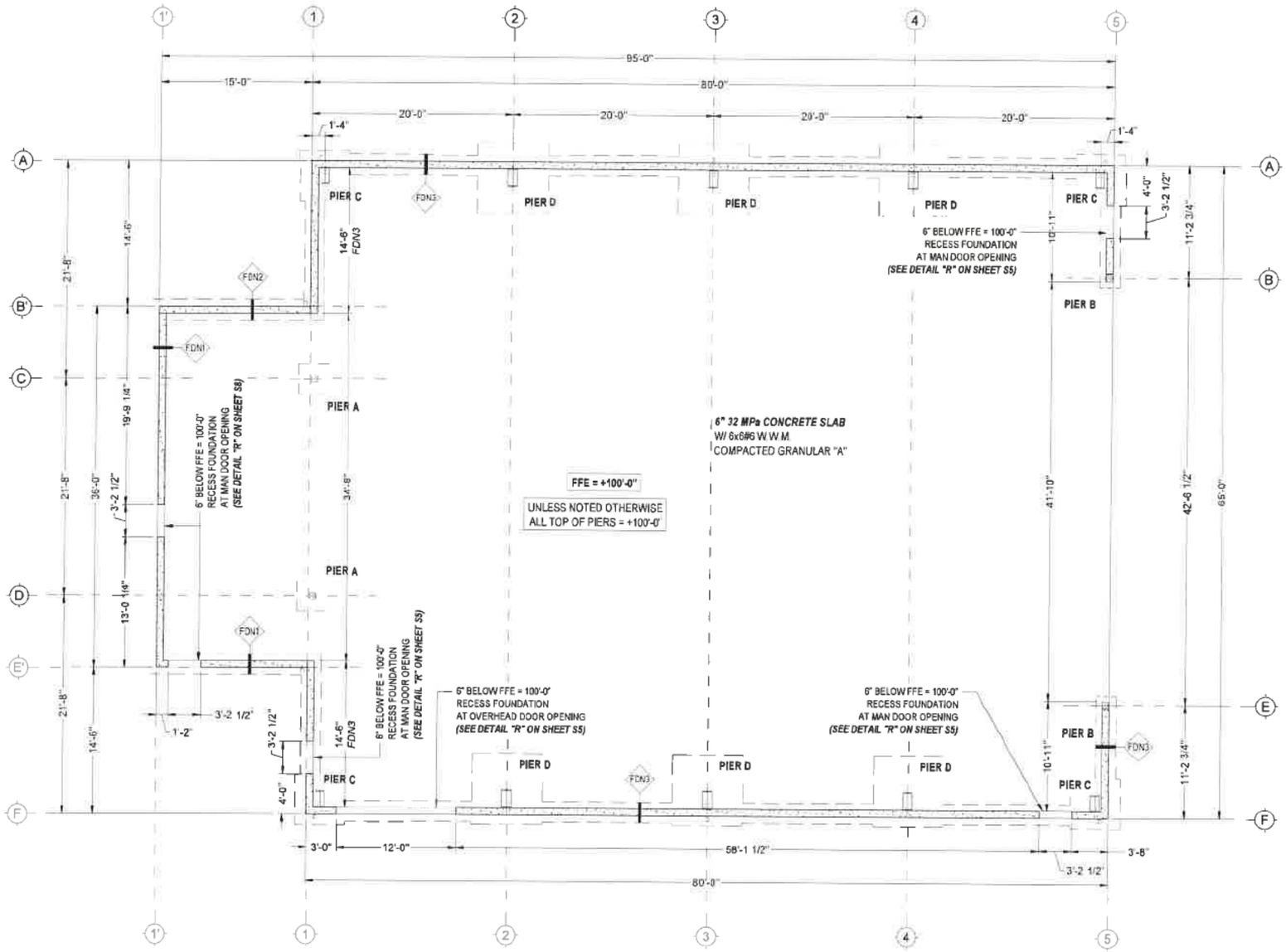

ALWAYS REFER TO PRE-ENGINEERED STEEL SHOP DRAWINGS FOR LAYOUT AND ANCHOR BOLT CONFIGURATION CONFIRMATION

IMPORTANT NOTE:
STEP FOOTING *(IF REQUIRED)* TO BE DETERMINED BY CONTRACTOR ON SITE TO KEEP FROST COVER

FOUNDATION PLAN
SCALE 3/32" = 1'-0"

This document and all associated documents may not be used, reproduced or modified in any manner or for any purpose. H Bye Engineering accepts no liability to any party that relies on these documents without the written consent of H.Bye Engineering.

[redacted]
Sept. 10, 2025
PROVINCE OF ONTARIO

DRAWING REVISIONS

No.	DATE	REVISION	BY	APPVD

DRAWING RELEASE

DATE	ISSUE	BY	APPVD
SEPT. 9, 2025	FOR PERMIT	R.M.M.	H.B.

ENGINEER:
H.BYE ENGINEERING
MOUNT FOREST
519-323-1527
Since 2017

OWNER:
MAYNARD AND VERA SHANTZ
123812 SOUTHGATE ROAD 12
HOLSTEIN, ONTARIO N0G 2A0

PROJECT NAME / LOCATION:
65'x80' WORKSHOP
123812 SOUTHGATE ROAD 12
HOLSTEIN, ONTARIO N0G 2A0

SHEET TITLE:
FOUNDATION PLAN

DWG FILE	2025-131-Maynard and Vera Shantz - New Work 2.dwg		
DRAWN BY:	R.M.M.	JOB#	2025-131
CHECKED BY:	H.B.		
REVISION	N/A		
DATE	SEPT. 6, 2025		
SCALE:	AS NOTED		

S1

SHEET SIZE = 17" x 11" - DO NOT SCALE DRAWINGS

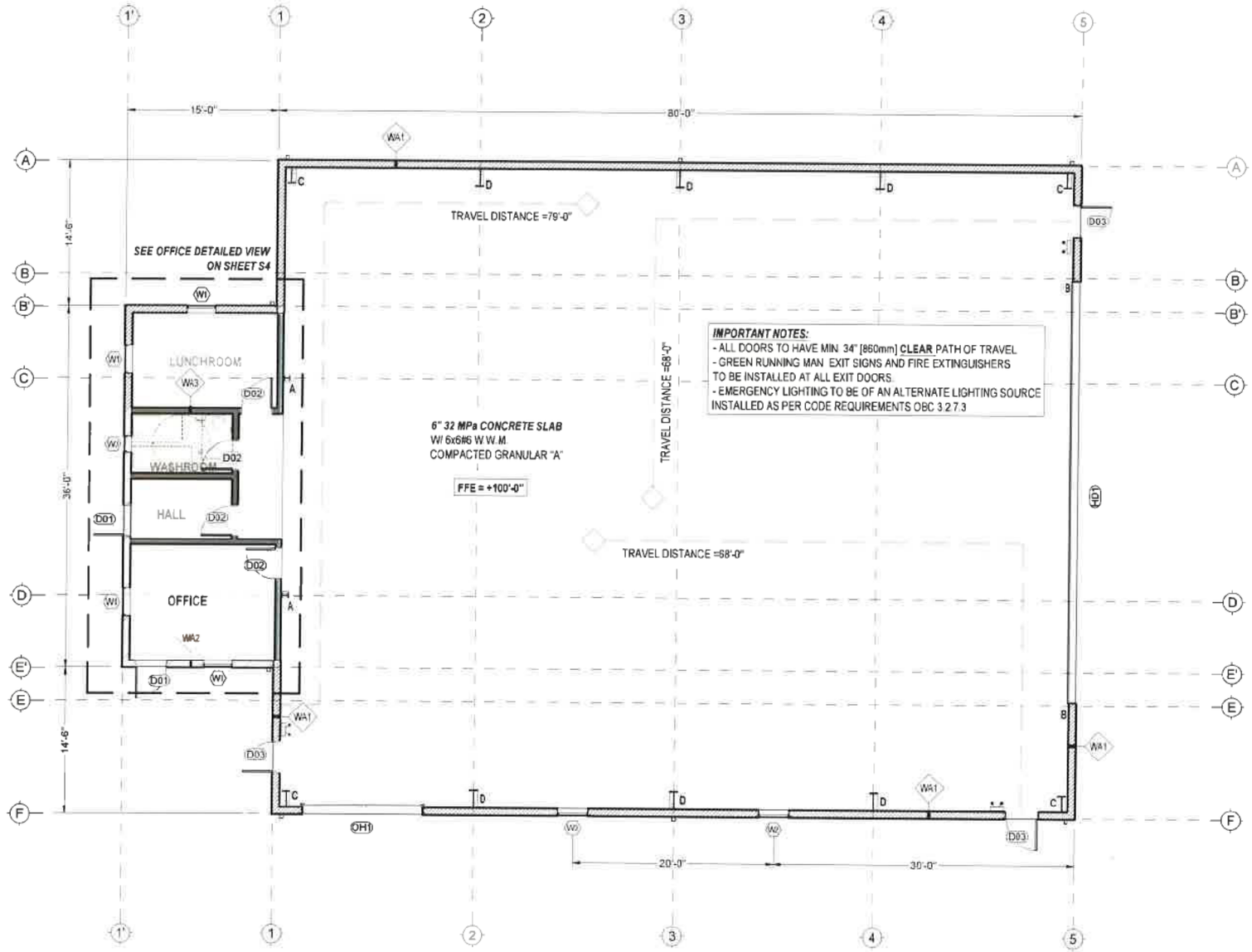

FLOOR PLAN
SCALE 3/32" = 1'-0"

This document and all associated documents may not be used, reproduced or modified in any manner or for any purpose. H.Bye Engineering accepts no liability to any party that relies on these documents without the written consent of H.Bye Engineering.

LICENSE [redacted]
Sept. 10, 2025
PROVINCE OF ONTARIO

DRAWING REVISIONS

No.	DATE	REVISION	BY	APPV'D

DRAWING RELEASE

DATE	ISSUE	BY	APPV'D
SEPT. 5 2025	FOR PERMIT	R.M.M.	H.B.

ENGINEER:
H.BYE ENGINEERING
MOUNT FOREST
519-323-1527
Since 2017

OWNER:
MAYNARD AND VERA SHANTZ
123812 SOUTHGATE ROAD 12
HOLSTEIN, ONTARIO N0G 2A0

PROJECT NAME / LOCATION:
65'x80' WORKSHOP
123812 SOUTHGATE ROAD 12
HOLSTEIN, ONTARIO N0G 2A0

SHEET TITLE:
FLOOR PLAN

DWG FILE:	2025 131 - Maynard and Vera Shantz - New Office A 5 dwg		
DRAWN BY	R.M.M.	JOB#:	2025.131
CHECKED BY	H.B.		
REVISION	N/A		
DATE:	SEPT. 6 2025		
SCALE	AS NOTED		

S2

SHEET SIZE = 17" x 11" - DO NOT SCALE DRAWINGS

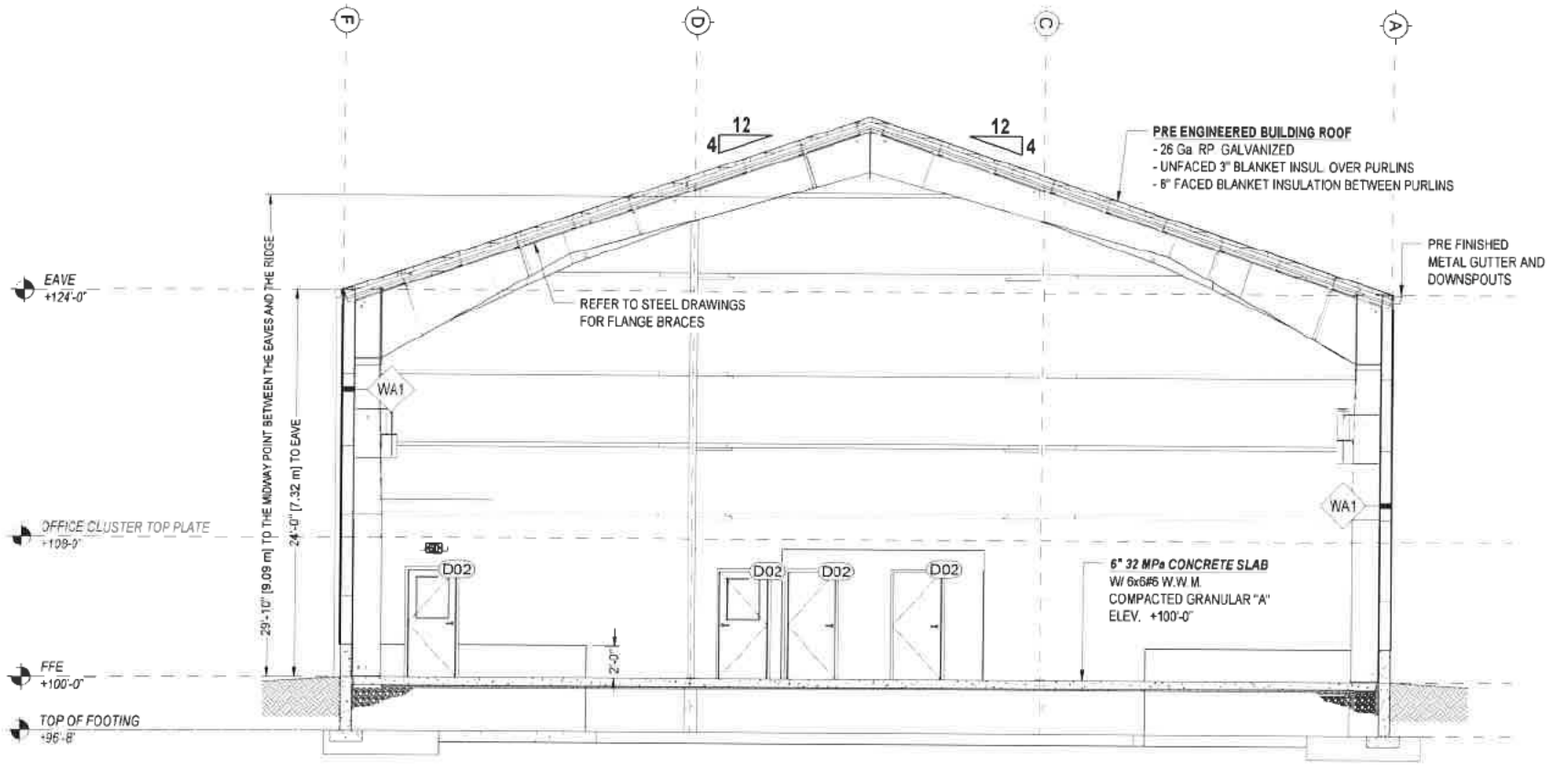

SECTION "A" (BUILDING SECTION)
SCALE 3/32" = 1'-0"

This document and all associated documents may not be used, reproduced or modified in any manner or for any purpose. H.Bye Engineering accepts no liability to any party that relies on these documents without the written consent of H.Bye Engineering.

[redacted]

Sept. 10, 2025
PROVINCE OF ONTARIO

DRAWING REVISIONS

No.	DATE	REVISION	BY	APPVD

DRAWING RELEASE

DATE	ISSUE	BY	APPVD
SEPT 6 2025	FOR PERMIT	R.M.M.	H.B.

ENGINEER:

H.BYE ENGINEERING
MOUNT FOREST
519-323-1527
Since 2017

OWNER:
MAYNARD AND VERA SHANTZ
123812 SOUTHGATE ROAD 12
HOLSTEIN, ONTARIO N0G 2A0

PROJECT NAME / LOCATION:
65'x80' WORKSHOP
123812 SOUTHGATE ROAD 12
HOLSTEIN, ONTARIO N0G 2A0

SHEET TITLE:
SECTION "A" (BUILDING SECTION)

DWG FILE:	2025 131 - Maynard and Vera Shantz - New Work.Dwg		
DRAWN BY:	R.M.M.	JOB#	2025 131
CHECKED BY:	H.B.		
REVISION	N/A		
DATE:	SEPT. 6, 2025		
SCALE	AS NOTED		

S3

SHEET SIZE = 17" x 11" - DO NOT SCALE DRAWINGS

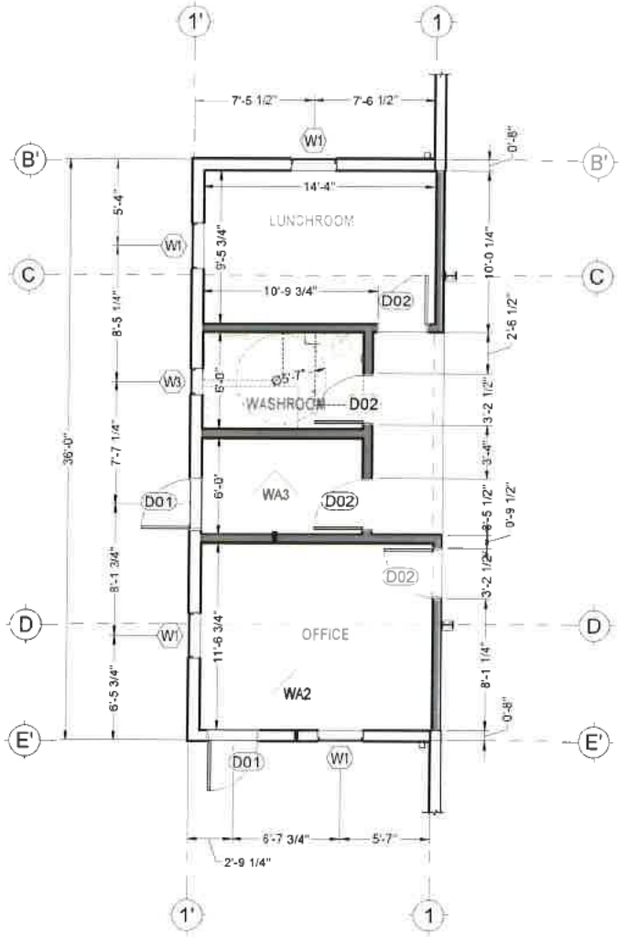

OFFICE FLOOR PLAN
SCALE 1/8" = 1'-0"

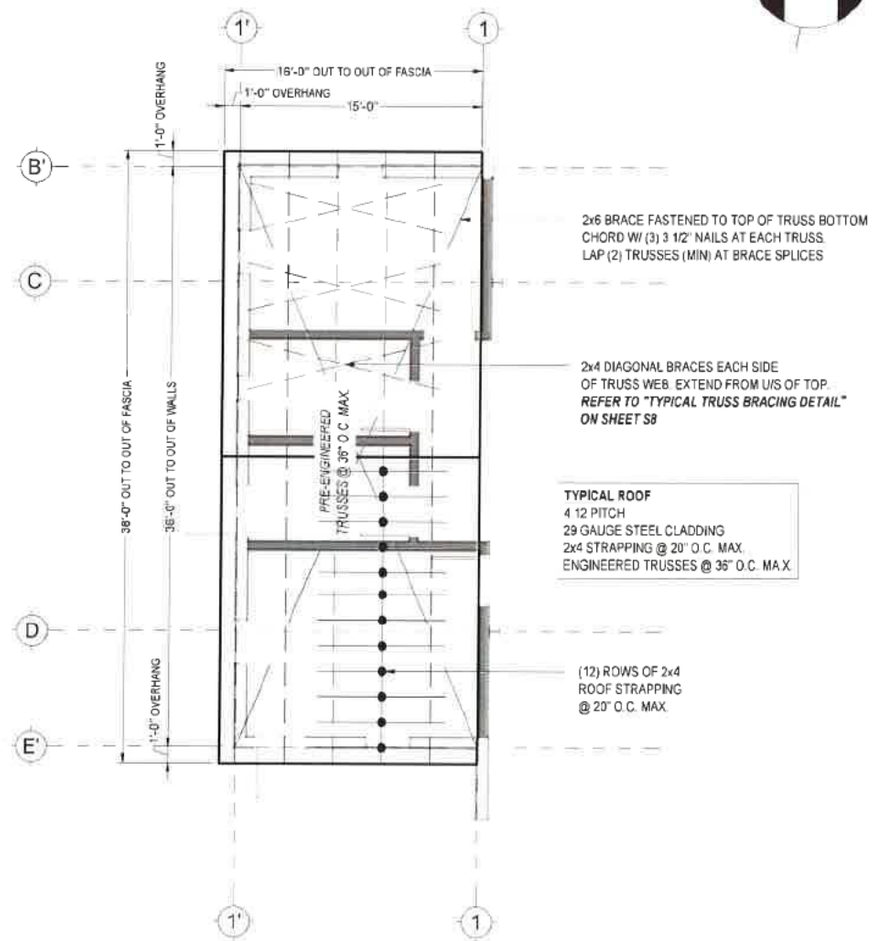

OFFICE ROOF PLAN
SCALE 1/8" = 1'-0"

TRUE NORTH
PROJECT NORTH

This document and all associated documents may not be used, reproduced or modified in any manner or for any purpose. H.Bye Engineering accepts no liability to any party that relies on these documents without the written consent of H.Bye Engineering.

[redacted]
Sept. 10, 2025
PROVINCE OF ONTARIO

DRAWING REVISIONS

No.	DATE	REVISION	BY	APPVD

DRAWING RELEASE

DATE	ISSUE	BY	APPVD
SEPT. 5, 2025	FOR PERMIT	R.M.M.	H.B.

ENGINEER:
H.BYE ENGINEERING
MOUNT FOREST
519-323-1527
Since 2017

OWNER:
MAYNARD AND VERA SHANTZ
123812 SOUTHGATE ROAD 12
HOLSTEIN, ONTARIO N0G 2A0

PROJECT NAME / LOCATION:
65'x80' WORKSHOP
123812 SOUTHGATE ROAD 12
HOLSTEIN, ONTARIO N0G 2A0

SHEET TITLE:
OFFICE FLOOR PLAN + OFFICE ROOF PLAN

DWG FILE	2025-131 - Maynard and Vera Shantz - New Work.dwg		
DRAWN BY	E.V.M.	JOB#	2025-131
CHECKED BY	H.B.		
REVISION	N/A		
DATE	SEPT. 5, 2025		
SCALE	AS NOTED		

S4

SHEET SIZE = 17" x 11" - DO NOT SCALE DRAWINGS

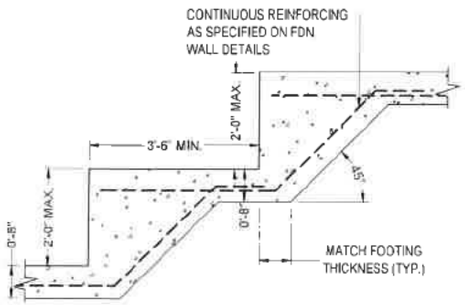

TYPICAL STEPPED FOUNDATION DETAIL
SCALE 3/8" = 1'-0"

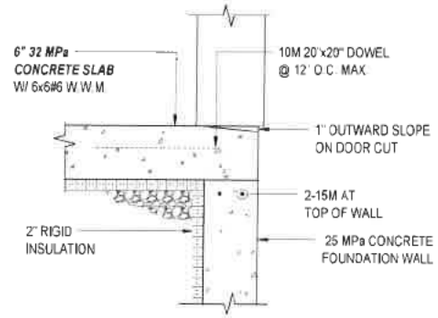

DETAIL "R" RECESS FOUNDATION
SCALE 1/2" = 1'-0"

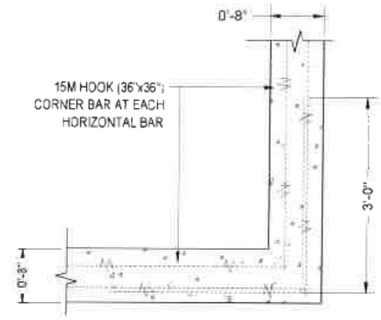

TYPICAL FOUNDATION WALL CORNER
SCALE 1/2" = 1'-0"

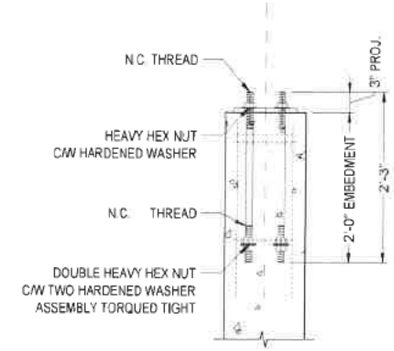

TYPICAL FOUNDATION WALL CORNER
SCALE 3/4" = 1'-0"

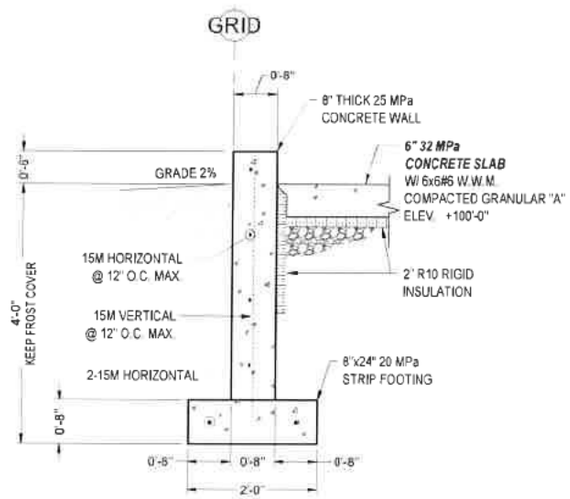

FDN1 DETAIL
SCALE 1/2" = 1'-0"

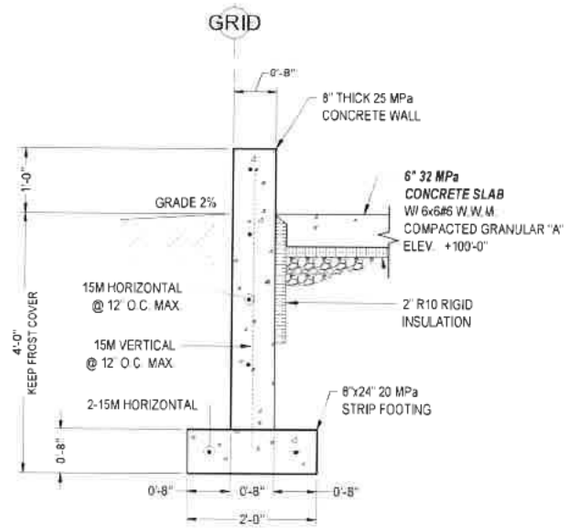

FDN3 DETAIL
SCALE 1/2" = 1'-0"

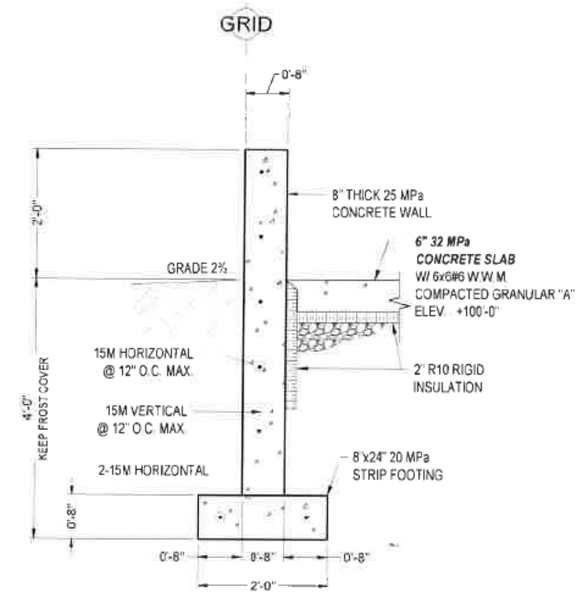

FDN3 DETAIL
SCALE 1/2" = 1'-0"

This document and all associated documents may not be used, reproduced or modified in any manner or for any purpose. H.Bye Engineering accepts no liability to any party that relies on these documents without the written consent of H.Bye Engineering.

LICENSED [redacted] Sept. 10, 2025 PROVINCE OF ONTARIO

DRAWING REVISIONS

No.	DATE	REVISION	BY	APPV'D

DRAWING RELEASE

DATE	ISSUE	BY	APPV'D
SEPT. 6, 2025	FOR PERMIT	R.M.M.	H.B.

ENGINEER:
H.BYE ENGINEERING
MOUNT FOREST
519-323-1527
Since 2017

OWNER:
MAYNARD AND VERA SHANTZ
123812 SOUTHGATE ROAD 12
HOLSTEIN, ONTARIO N0G 2A0

PROJECT NAME / LOCATION:
65'x80' WORKSHOP
123812 SOUTHGATE ROAD 12
HOLSTEIN, ONTARIO N0G 2A0

SHEET TITLE:
STRUCTURAL DETAILS #1

DWG FILE	[illegible]		
DRAWN BY	R.M.M.	JOB#	2025.131
CHECKED BY	H.B.		
REVISION	N/A		
DATE	SEPT. 6, 2025		
SCALE	AS NOTED		

S5

SHEET SIZE = 17" x 11" - DO NOT SCALE DRAWINGS

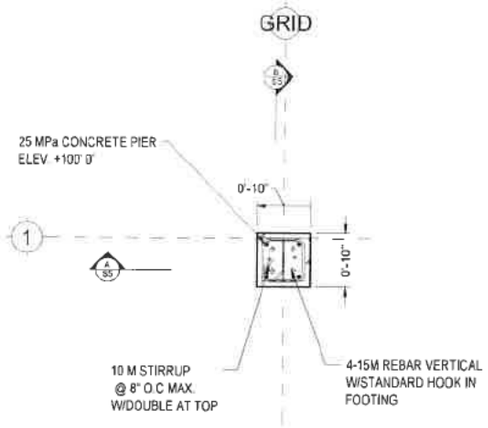

PIER "A" TOP VIEW
SCALE 1/2" = 1'-0"

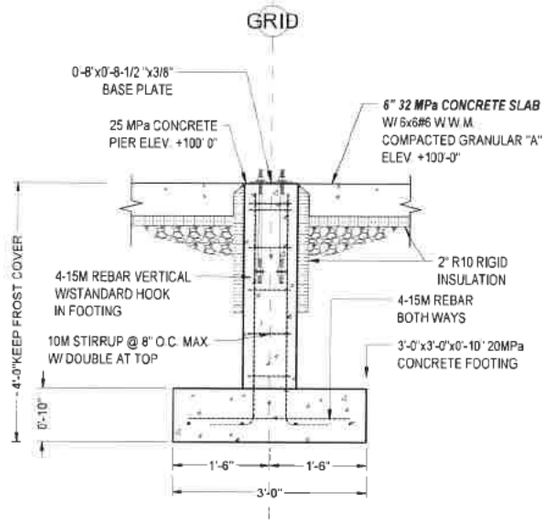

PIER "A" SECTION A
SCALE 1/2" = 1'-0"

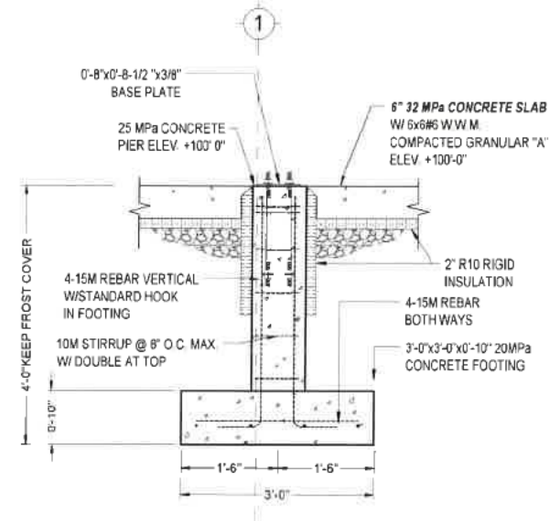

PIER "A" SECTION B
SCALE 1/2" = 1'-0"

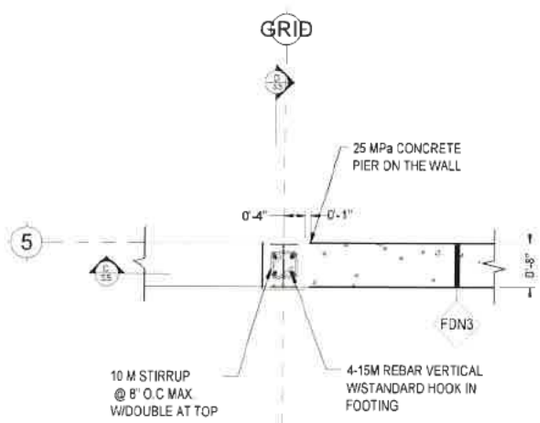

PIER "B" TOP VIEW
SCALE 1/2" = 1'-0"

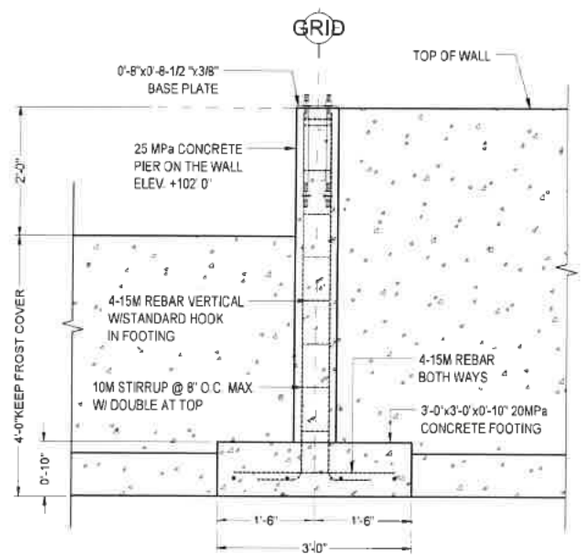

PIER "B" SECTION C
SCALE 1/2" = 1'-0"

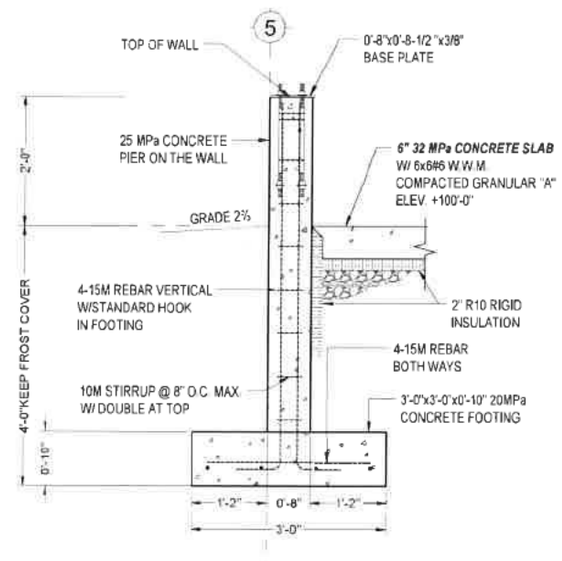

PIER "B" SECTION D
SCALE 1/2" = 1'-0"

This document and all associated documents may not be used, reproduced or modified in any manner or for any purpose. H.Bye Engineering accepts no liability to any party that relies on these documents without the written consent of H.Bye Engineering.

[redacted]

LICENSED
Sept. 10, 2025
PROVINCE OF ONTARIO

DRAWING REVISIONS

No.	DATE	REVISION	BY	APPVD

DRAWING RELEASE

DATE	ISSUE	BY	APPVD
SEPT. 5 2025	FOR PERMIT	R.M.M.	H.B.

ENGINEER:

H.BYE ENGINEERING
MOUNT FOREST
519-323-1527
Since 2017

OWNER:
MAYNARD AND VERA SHANTZ
123812 SOUTHGATE ROAD 12
HOLSTEIN, ONTARIO N0G 2A0

PROJECT NAME / LOCATION:
65'x80' WORKSHOP
123812 SOUTHGATE ROAD 12
HOLSTEIN, ONTARIO N0G 2A0

SHEET TITLE:
STRUCTURAL DETAILS #2

DWG FILE	2025.131 - Maynard and Vera Shantz - New Work.dwg		
DRAWN BY	E.V.M.	JOB#	2025.131
CHECKED BY	H.B.		
REVISION	N/A		
DATE	SEPT. 6 2025		
SCALE	AS NOTED		

S6

SHEET SIZE = 17" x 11" - DO NOT SCALE DRAWINGS

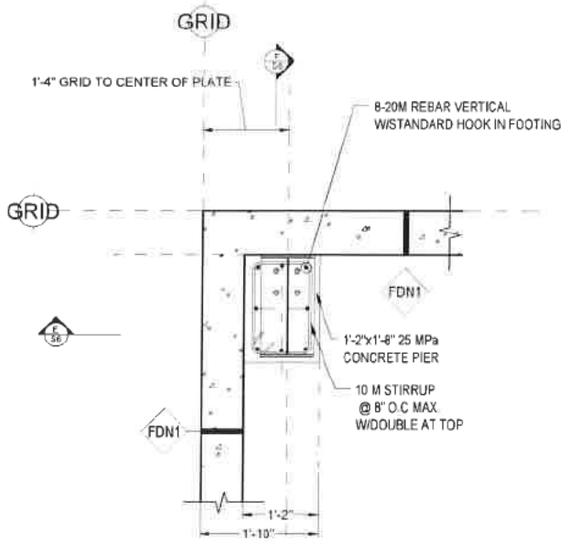

PIER "C" TOP VIEW
SCALE 1/2" = 1'-0"

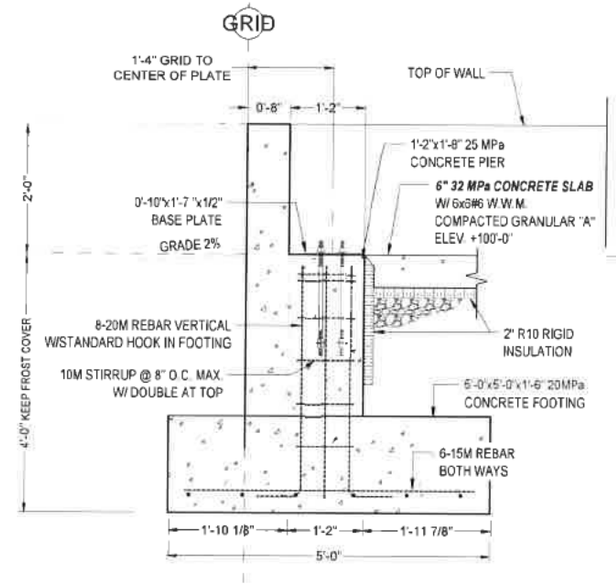

PIER "C" SECTION E
SCALE 1/2" = 1'-0"

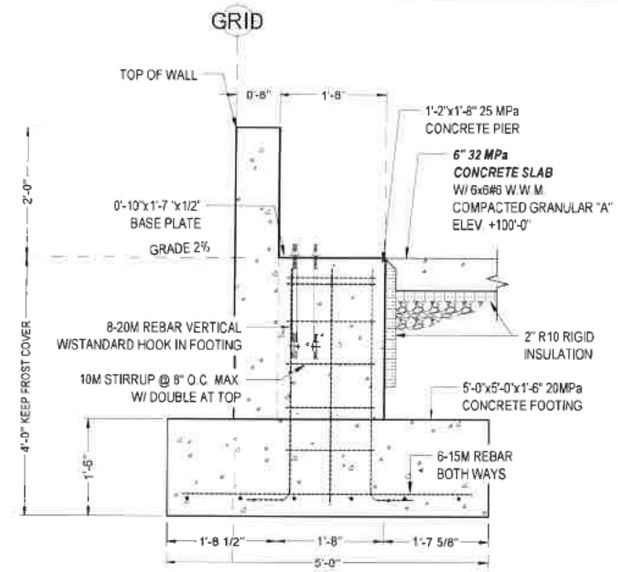

PIER "C" SECTION F
SCALE 1/2" = 1'-0"

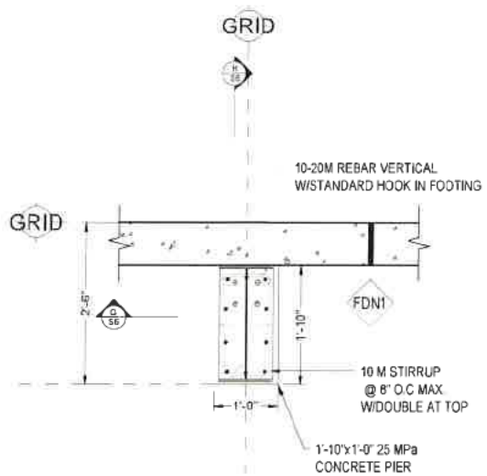

PIER "D" TOP VIEW
SCALE 1/2" = 1'-0"

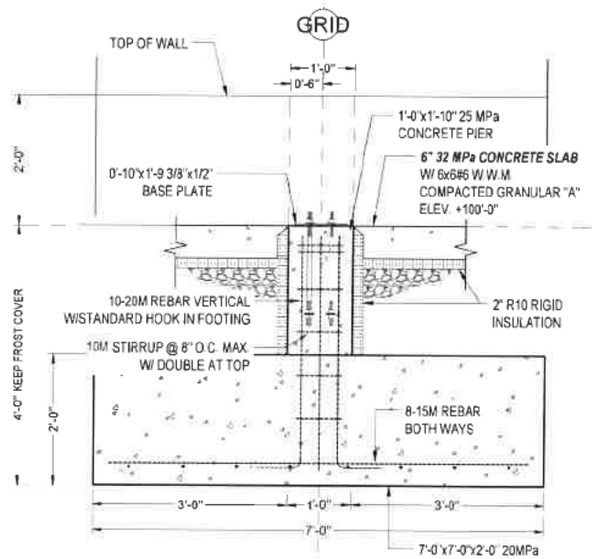

PIER "D" SECTION G
SCALE 1/2" = 1'-0"

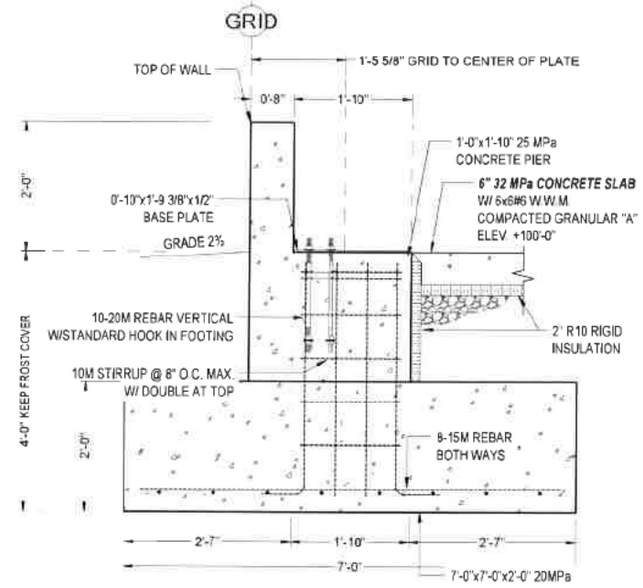

PIER "D" SECTION H
SCALE 1/2" = 1'-0"

This document and all associated documents may not be used, reproduced or modified in any manner or for any purpose. H.Bye Engineering accepts no liability to any party that relies on these documents without the written consent of H.Bye Engineering.

LICENSED [redacted] Sept. 10, 2025 PROVINCE OF ONTARIO

DRAWING REVISIONS

No.	DATE	REVISION	BY	APPVD

DRAWING RELEASE

DATE	ISSUE	BY	APPVD
SEPT. 9 2025	FOR PERMIT	R.M.M.	H.B.

ENGINEER:
H.BYE ENGINEERING
MOUNT FOREST
519-323-1527
Since 2017

OWNER:
MAYNARD AND VERA SHANTZ
123812 SOUTHGATE ROAD 12
HOLSTEIN, ONTARIO N0G 2A0

PROJECT NAME / LOCATION:
65'x80' WORKSHOP
123812 SOUTHGATE ROAD 12
HOLSTEIN, ONTARIO N0G 2A0

SHEET TITLE:
STRUCTURAL DETAILS #3

DWG FILE	2025 131 - Maynard and Vera Shantz - New Work.Dwg		
DRAWN BY	E.V.M.	JOB#	2025 131
CHECKED BY	H.B.		
REVISION	N/A		
DATE	SEPT. 9 2025		
SCALE	AS NOTED		

S7

SHEET SIZE = 17" x 11" - DO NOT SCALE DRAWINGS

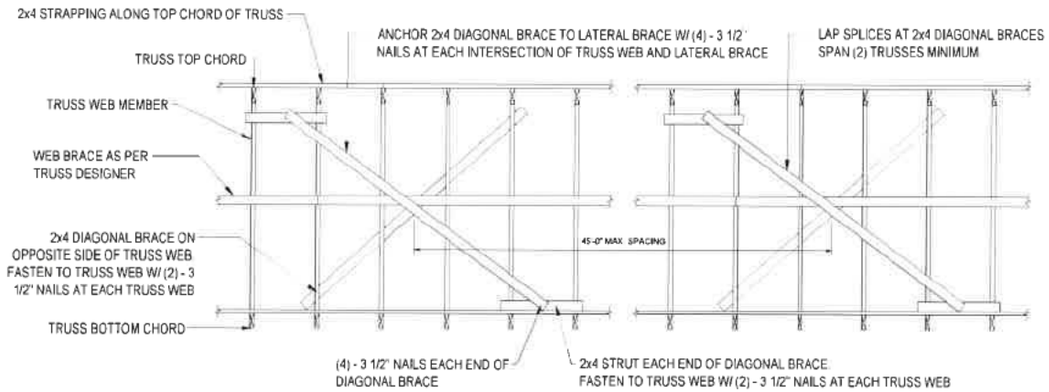

TYPICAL TRUSS BRACING DETAIL
SCALE 1/4" = 1'-0"

DOOR AND WINDOW SCHEDULE

TAG	DESCRIPTION	LINTEL SIZE	WALL STUD SIZE	BEARING MEMBER SIZE	QTY
OH1	12' WIDE x 10' TALL INSULATED OVERHEAD DOOR	REFER TO P25072401 DRAWINGS	-	REFER TO P25072401 DRAWINGS	1 PC.
HD1	42' WIDE x 16' TALL INSULATED HYDRAULIC DOOR	REFER TO P25072401 DRAWINGS	-	REFER TO P25072401 DRAWINGS	1 PC.
D01	36"x80" EXTERIOR MAN DOOR (BARRIER FREE)	(2) 2x6 SPF No. 2	2x6	(2) 2x6 JACK STUD + (1) 2x6 KING STUD	2 PC.
D02	36"x80" INTERIOR MAN DOOR (BARRIER FREE)	(2) 2x6 SPF No. 2	2x6	(1) 2x6 JACK STUD + (1) 2x6 KING STUD	4PC.
D03	36"x80" EXTERIOR MAN DOOR (BARRIER FREE)	REFER TO P25072401 DRAWINGS	-	REFER TO P25072401 DRAWINGS	3 PC.
W1	34"x52" WINDOW	(2) 2x6 SPF No. 2	2x6	(2) 2x6 JACK STUD + (1) 2x6 KING STUD	4 PC.
W2	36"x48" WINDOW	REFER TO P25072401 DRAWINGS	-	REFER TO P25072401 DRAWINGS	2 PC.
W3	20"x30" WINDOW	(2) 2x6 SPF No. 2	2x6	(1) 2x6 JACK STUD + (1) 2x6 KING STUD	1 PC.

NAILING TO FRAMING

TAG	CONSTRUCTION DETAIL	MIN. LENGTH OF NAILS	MIN. NUMBER OR MAX SPACING OF NAILS
1.	STUD TO WALL PLATE (EACH END) END NAILED	3 1/4" (82mm)	3
2.	DOUBLED STUDS AT OPENINGS, OR STUDS AT WALLS OR WALL INTERSECTIONS AND CORNERS	3" (76mm)	30" (750mm) O.C.
3.	DOUBLED TOP WALL PLATES	3" (76mm)	24" (600mm) O.C.
4.	INTERIOR WALLS TO FRAMING OR SUBFLOORING	3 1/4" (82mm)	24" (600mm) O.C.
5.	HORIZONTAL MEMBER OVER OPENINGS IN NON-LOADBEARING WALLS – EACH END	3 1/4" (82mm)	2
6.	LINTELS TO STUDS	3 1/4" (82mm)	4 AT EACH END

WALL SCHEDULE

TAG	DESCRIPTION	SECTION VIEW	CONSTRUCTION DETAIL
WA1	EXTERIOR STEEL WALL	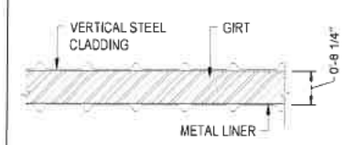	- 26 GA. STEEL CLADDING - 8" STEEL GIRTS - INSULATION - 29 Ga. PRE-FINISHED METAL LINER
WA2	EXTERIOR 2x6 WALL	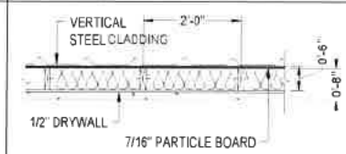	- 26 GA. STEEL CLADDING - 7/16 FIR PLYWOOD - 2x6 STUDS @ 24" O.C. MAX. - HORIZONTAL BLOCKING @ 48" O.C. MAX. - R-22 INSULATION - 1/2" DRYWALL - SINGLE BOTTOM PLATE & DOUBLE TOP PLATE - SILL PLATE W/SILL GASKET - 1/2"x5" ANCHORS @ 48" O.C.
WA3	INTERIOR 2x4 WALL	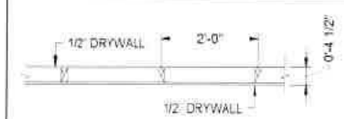	- 1/2" DRYWALL - 2x4 STUDS @ 24" O.C. MAX. - HORIZONTAL BLOCKING @ 48" O.C. MAX. - 1/2" DRYWALL - SINGLE BOTTOM PLATE & DOUBLE TOP PLATE - SILL PLATE W/SILL GASKET - 1/2"x5" ANCHORS @ 48" O.C.

This document and all associated documents may not be used, reproduced or modified in any manner or for any purpose. H.Bye Engineering accepts no liability to any party that relies on these documents without the written consent of H.Bye Engineering.

LICENSED ENGINEER [redacted] Sept. 10, 2025 PROVINCE OF ONTARIO

DRAWING REVISIONS

No.	DATE	REVISION	BY	APPVD

DRAWING RELEASE

DATE	ISSUE	BY	APPVD
SEPT. 3, 2025	FOR PERMIT	R.M.M.	H.B.

ENGINEER:

H.BYE ENGINEERING
MOUNT FOREST
519-323-1527
Since 2017

OWNER:
MAYNARD AND VERA SHANTZ
123812 SOUTHGATE ROAD 12
HOLSTEIN, ONTARIO N0G 2A0

PROJECT NAME / LOCATION:
65'x80' WORKSHOP
123812 SOUTHGATE ROAD 12
HOLSTEIN, ONTARIO N0G 2A0

SHEET TITLE:
STRUCTURAL DETAILS #4

DWG FILE	2025131 - Maynard and Vera Shantz - New Barn Shop		
DRAWN BY	E.V.M.	JOB#	2025.131
CHECKED BY	H.B.		
REVISION	N/A		
DATE	SEPT. 6, 2025		
SCALE	AS NOTED		

S8

SHEET SIZE = 17" x 11" - DO NOT SCALE DRAWINGS

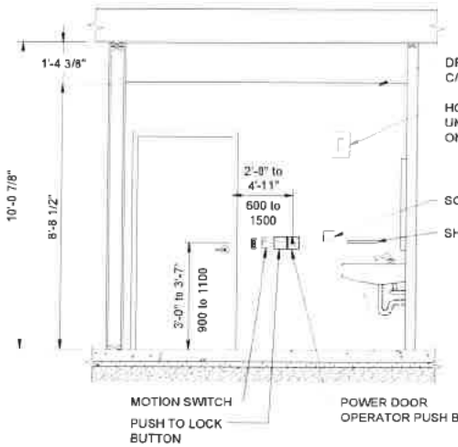

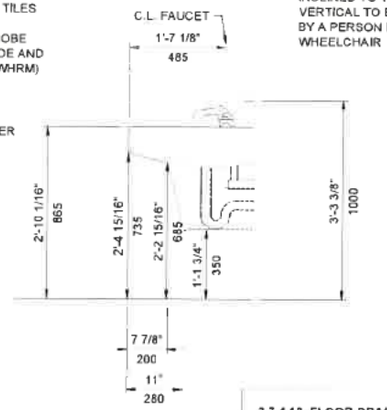

MIRROR MOUNTED WITH ITS BOTTOM EDGE NOT MORE THAN 3'-3 3/8" (1000 mm) ABOVE THE FINISHED FLOOR OR INCLINED TO THE VERTICAL TO BE USABLE BY A PERSON IN A WHEELCHAIR

EMERGENCY SIGNAGE

IN THE EVENT OF AN EMERGENCY PUSH EMERGENCY BUTTON AND AUDIBLE AND VISUAL SIGNAL WILL ACTIVATE

1" (25mm) HIGH LETTERS w/ 3/16" (5mm) STROKE, POSTED ABOVE EMERGENCY BUTTON

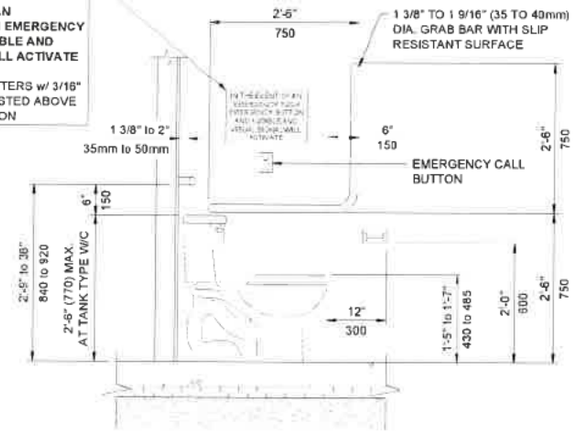

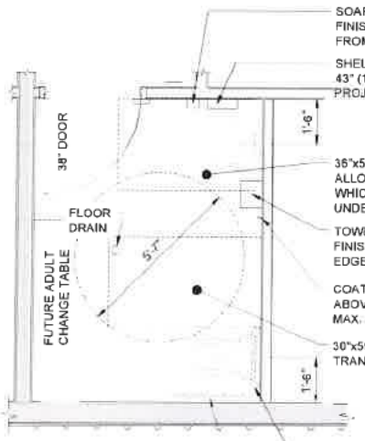

SOAP DISPENSER MAX 47" (1100mm) ABOVE FINISHED FLOOR AND 20" (500mm) MAX. FROM EDGE OF LAVATORY

SHELF, MAX. 8" (200mm) ABOVE LAV. AND 43" (1100mm) ABOVE FLOOR. MAX. 4" (100mm) PROJECTION FROM WALL

36"x54" (920mm x 1370mm) CLEAR SPACE TO ALLOW FOR A FORWARD APPROACH, OF WHICH 20" (500mm) MAX. CAN BE LOCATED UNDER THE LAVATORY

TOWEL DISPENSER MAX 47" (1200mm) ABOVE FINISHED FLOOR AND MAX. 24" (600mm) FROM EDGE OF LAVATORY

COAT HOOK NOT MORE THAN 47" (1200mm) ABOVE FINISHED FLOOR AND MAX. 2" (50mm) PROJECTION

30"x59" (900mm X 1500mm) TRANSFER SPACE

24" (600mm) REAR GRAB BAR. PROVIDE SOLID BLOCKING BETWEEN STUDS FOR ATTACHMENT

L-SHAPED GRAB BAR 30"x30" (760mm X 760mm), PROVIDE SOLID BLOCKING BETWEEN STUDS FOR ATTACHMENT

IMPORTANT NOTE:
ALWAYS ALLOW EXTRA ROOM WHEN BUILDING UNIVERSAL WASHROOMS, NEVER FIT TIGHT. NON-CONFORMING CLEARANCES WILL NOT PASS FINAL INSPECTION

3.7.4.13. FLOOR DRAINS

- A floor drain shall be installed in a washroom for public use that contains a urinal or a water closet equipped with an automatic flushing device.

GENERAL

- Provide lighting controlled by a motion sensor
- Provide emergency call system that consists of audible and visual signal devices inside and outside of washroom that are activated by a control device within the washroom.

3.8.3.9. WATER CLOSETS

- to be quipped with a seat located between 430mm (17") and 485mm (19") above finished floor,
- to flush automatically or be equipped with hand operated flushing control that,
  - is located between 500mm (19 5/8") and 900mm (35 1/2") above finished floor
  - is operable from the transfer side, and
  - is operable using a closed fist and with a force of not more than 22.2 N, and
- be equipped with back support back support where there is no seat lid or tank.

3.8.3.11. LAVATORIES

- equipped with insulated pipes where they would otherwise present a burn hazard or have water supply temperature limited to a maximum of 43°C
- be equipped with faucets that operate automatically or have a manual control that
  - has a lever type handle or is otherwise operable with a closed fist,
  - does not require the application of continuous force to maintain water flow
- have a soap dispenser that operates automatically or is operable using a closed fist and with a force of not more than 22.2 N, and
- have a towel dispenser or other hand drying equipment that is,
  - located to be accessible to persons in wheelchairs,
  - operable with one hand, and
  - located not more than 610mm, measured horizontally, from the edge of the lavatory

UNIVERSAL WASHROOM DOOR

- have a clear width of not less than 860 mm when the door is in the open position
- equipped with a graspable latch-operating mechanism that is,
  - operable using a closed fist and with a force not more than 22.2 N, and
  - be located between 900 mm and 1 000 mm above finished floor
  - is capable of being locked from the inside and released from the outside in case of emergency
- door opening devices that are the only means of operation shall,
  - be designed to be operable using a closed fist, and
  - be mounted not less than 900 mm and not more than 1 100 mm above the finished floor,
- door serving universal washrooms shall be equipped with a power door operators,
- controls for the power door operator shall,
  - have a face dimension of not less than,
    - 150 mm in diameter where the control is circular, or
    - 50 mm by 100 mm where the control is rectangular,
  - be operable using a closed fist,
  - be located so that,
    - its centre is located not less than 900 mm and not more than 1 100 mm from the finished floor or ground, or
    - it extends from not more than 200 mm to not less than 900 mm above the finished floor or ground,
  - be located not less than 600 mm and not more than 1 500 mm beyond the door swing where the door opens towards the control,
  - be located to allow persons to activate the opening of the door from either direction of travel,
  - be located so that the path of travel is not obstructed
  - be located in a clearly visible position, and
  - contain a sign incorporating the International Symbol of Access.

UNIVERSAL WASHROOM DETAILS
SCALE N.T.S.

This document and all associated documents may not be used, reproduced or modified in any manner or for any purpose. H.Bye Engineering accepts no liability to any party that relies on these documents without the written consent of H.Bye Engineering.

LICENSED ENGINEER [redacted] Sept. 10, 2025 PROVINCE OF ONTARIO

DRAWING REVISIONS

No	DATE	REVISION	BY	APPVD

DRAWING RELEASE

DATE	ISSUE	BY	APPVD
SEPT 3 2025	FOR PERMIT	R.M.M.	H.B.

ENGINEER:
H.BYE ENGINEERING
MOUNT FOREST
519-323-1527
Since 2017

OWNER:
MAYNARD AND VERA SHANTZ
123812 SOUTHGATE ROAD 12
HOLSTEIN, ONTARIO N0G 2A0

PROJECT NAME / LOCATION:
65'x80' WORKSHOP
123812 SOUTHGATE ROAD 12
HOLSTEIN, ONTARIO N0G 2A0

SHEET TITLE:
UNIVERSAL WASHROOM

DWG FILE	2025 131 - Maynard Shantz - New Shop		
DRAWN BY	E.V.M.	JOB#	2025 131
CHECKED BY	H.B.		
REVISION	N/A		
DATE	SEPT. 6 2025		
SCALE	AS NOTED		

S9

SHEET SIZE = 17" x 11" - DO NOT SCALE DRAWINGS

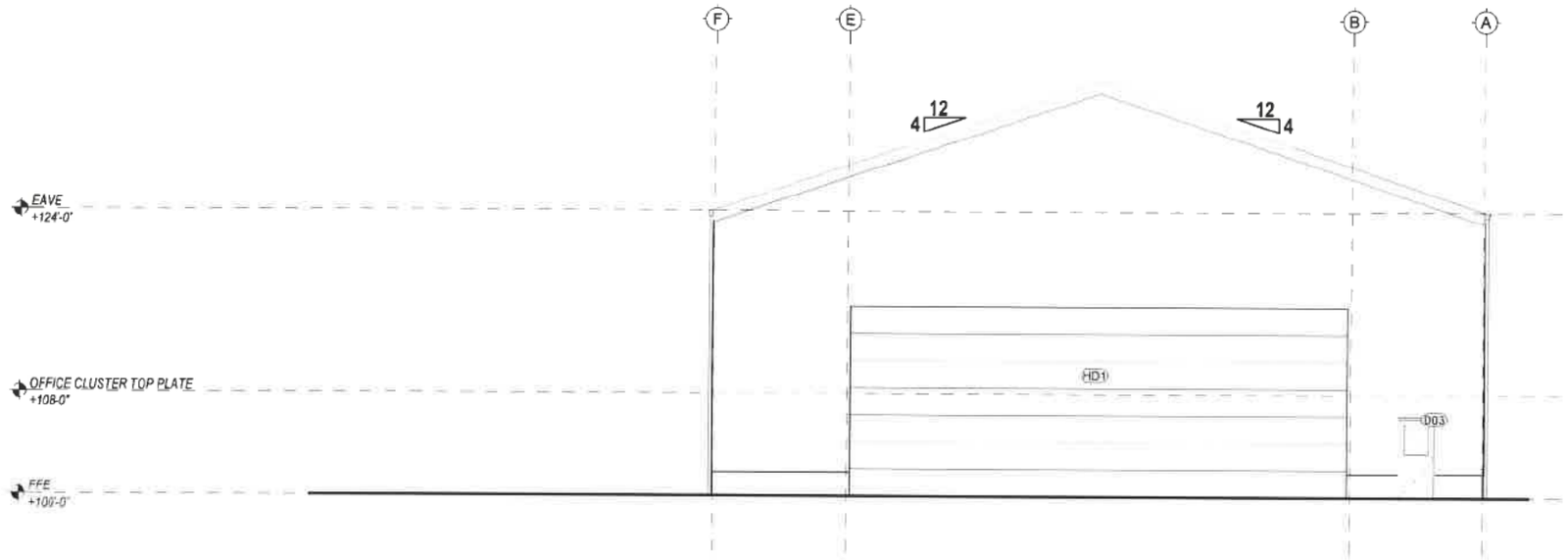

SOUTH ELEVATION
SCALE 3/32" = 1'-0"

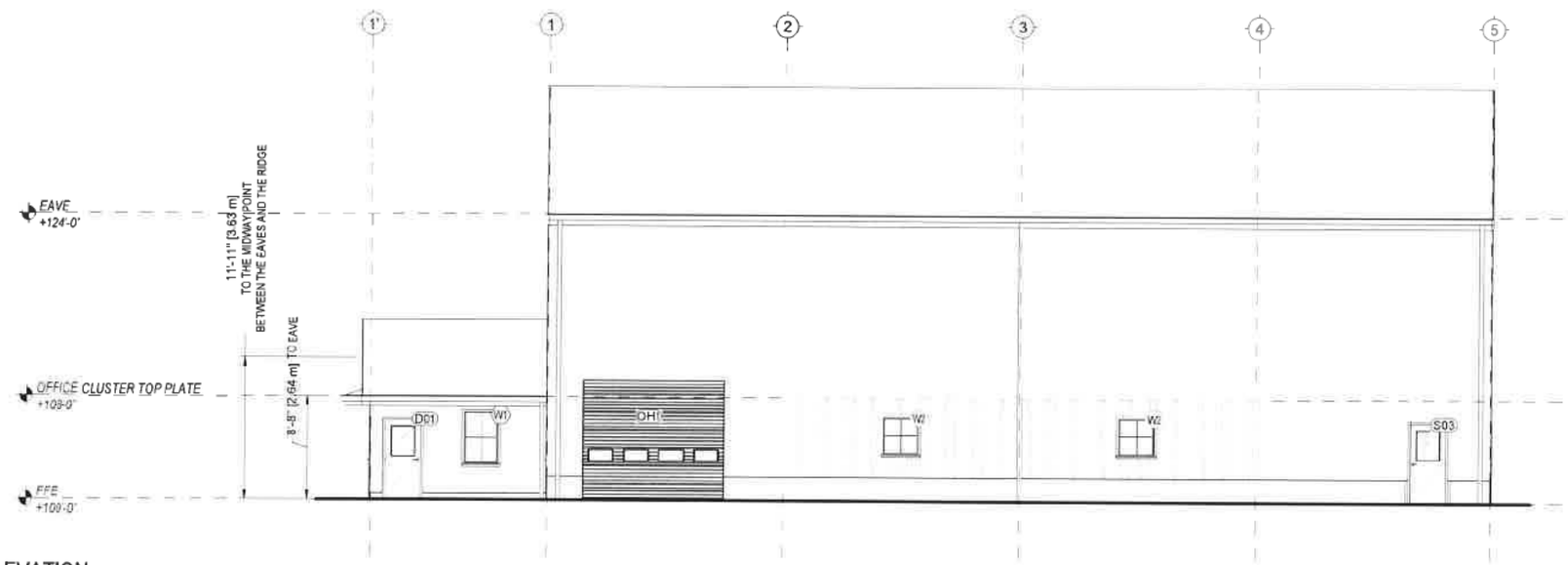

WEST ELEVATION
SCALE 3/32" = 1'-0"

This document and all associated documents may not be used, reproduced or modified in any manner or for any purpose. H Bye Engineering accepts no liability to any party that relies on these documents without the written consent of H Bye Engineering.

LICENSED ENGINEER
[redacted]
Sept. 10, 2025
PROVINCE OF ONTARIO

DRAWING REVISIONS

No	DATE	REVISION	BY	APPVD

DRAWING RELEASE

DATE	ISSUE	BY	APPVD
SEPT. 6 2025	FOR PERMIT	R.M.M.	H.B.

ENGINEER:

H.BYE ENGINEERING
MOUNT FOREST
519-323-1527
Since 2017

OWNER:
MAYNARD AND VERA SHANTZ
123812 SOUTHGATE ROAD 12
HOLSTEIN, ONTARIO N0G 2A0

PROJECT NAME / LOCATION:
65'x80' WORKSHOP
123812 SOUTHGATE ROAD 12
HOLSTEIN, ONTARIO N0G 2A0

SHEET TITLE:
WEST ELEVATION + SOUTH ELEVATION

SHEET SIZE = 17" x 11" - DO NOT SCALE DRAWINGS

DWG FILE	225131 - Maynard and Vera Shantz - New Work Shop		
DRAWN BY:	R.M.M.	JOB#	2025.131
CHECKED BY	H.B.		
REVISION:	N/A		
DATE	SEPT. 6, 2025		
SCALE	AS NOTED		

S10

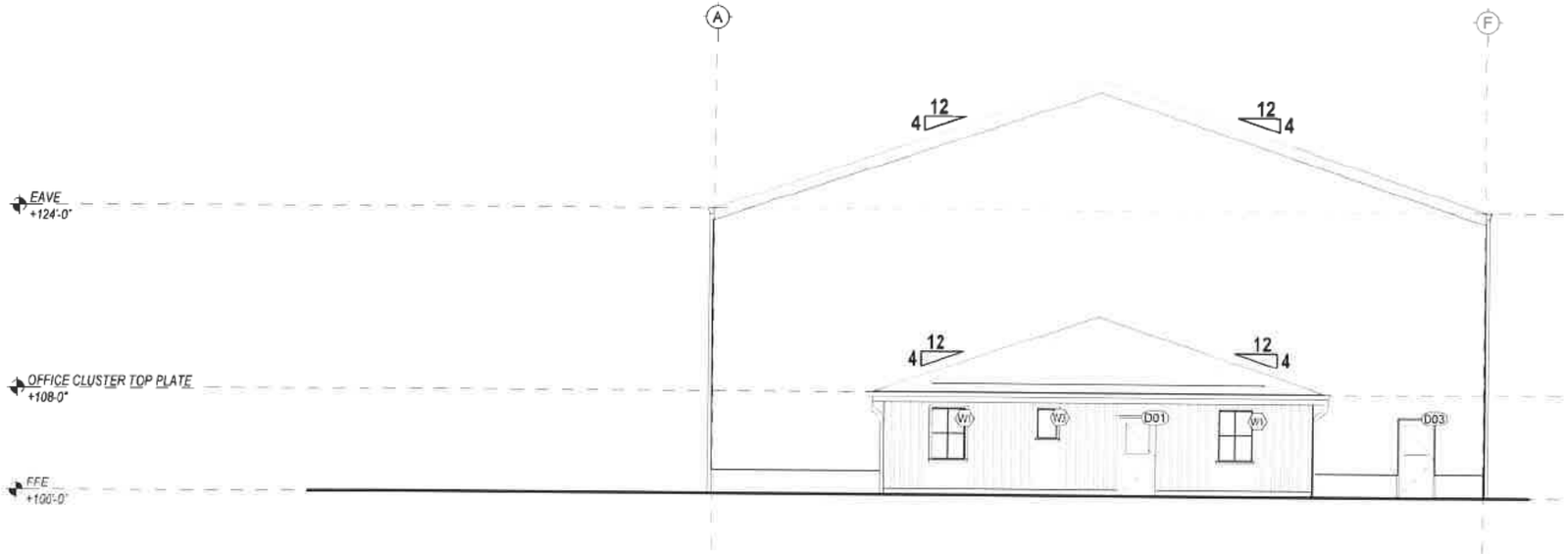

NORTH ELEVATION
SCALE 3/32" = 1'-0"

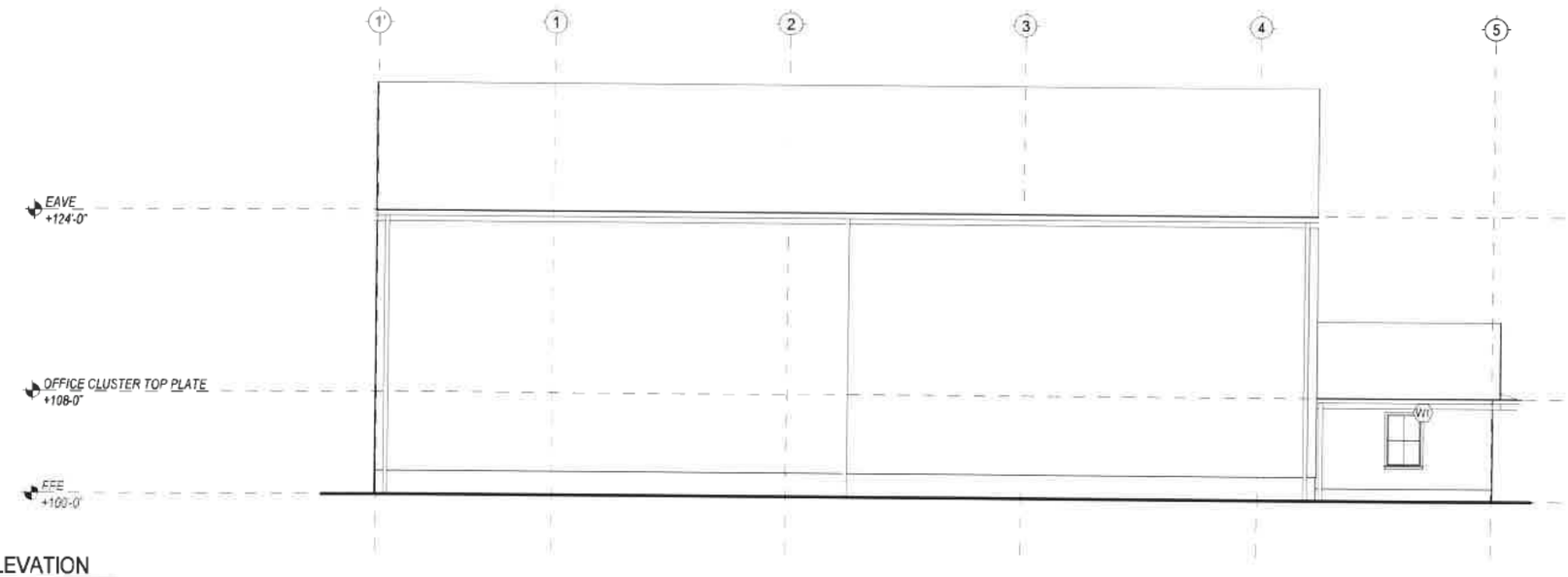

EAST ELEVATION
SCALE 3/32" = 1'-0"

This document and all associated documents may not be used, reproduced or modified in any manner or for any purpose. H.Bye Engineering accepts no liability to any party that relies on these documents without the written consent of H.Bye Engineering.

LICENSE [redacted]
Sept. 10, 2025
PROVINCE OF ONTARIO

DRAWING REVISIONS

No	DATE	REVISION	BY	APPVD

DRAWING RELEASE

DATE	ISSUE	BY	APPVD
SEPT. 9, 2025	FOR PERMIT	R.M.M.	H.B.

ENGINEER:

H.BYE ENGINEERING
MOUNT FOREST
519-323-1527
Since 2017

OWNER:
MAYNARD AND VERA SHANTZ
123812 SOUTHGATE ROAD 12
HOLSTEIN, ONTARIO N0G 2A0

PROJECT NAME / LOCATION:
65'x80' WORKSHOP
123812 SOUTHGATE ROAD 12
HOLSTEIN, ONTARIO N0G 2A0

SHEET TITLE:
EAST ELEVATION + NORTH ELEVATION

DWG FILE	2025 131 - Maynard and Vera Shantz - New Work Shop		
DRAWN BY	R.M.M.	JOB#	2025.131
CHECKED BY:	H.B.		
REVISION	N/A		
DATE	SEPT. 6, 2025		
SCALE:	AS NOTED		

S11

SHEET SIZE = 17" x 11" - DO NOT SCALE DRAWINGS

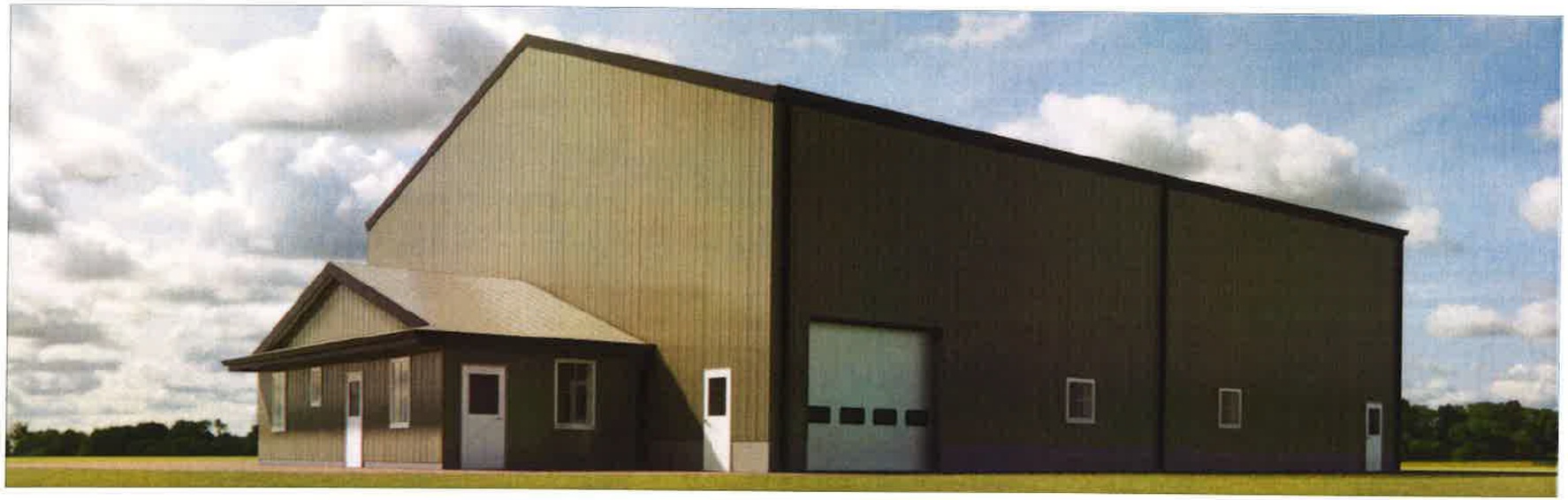

NORTH WEST VIEW
SCALE N.T.S.

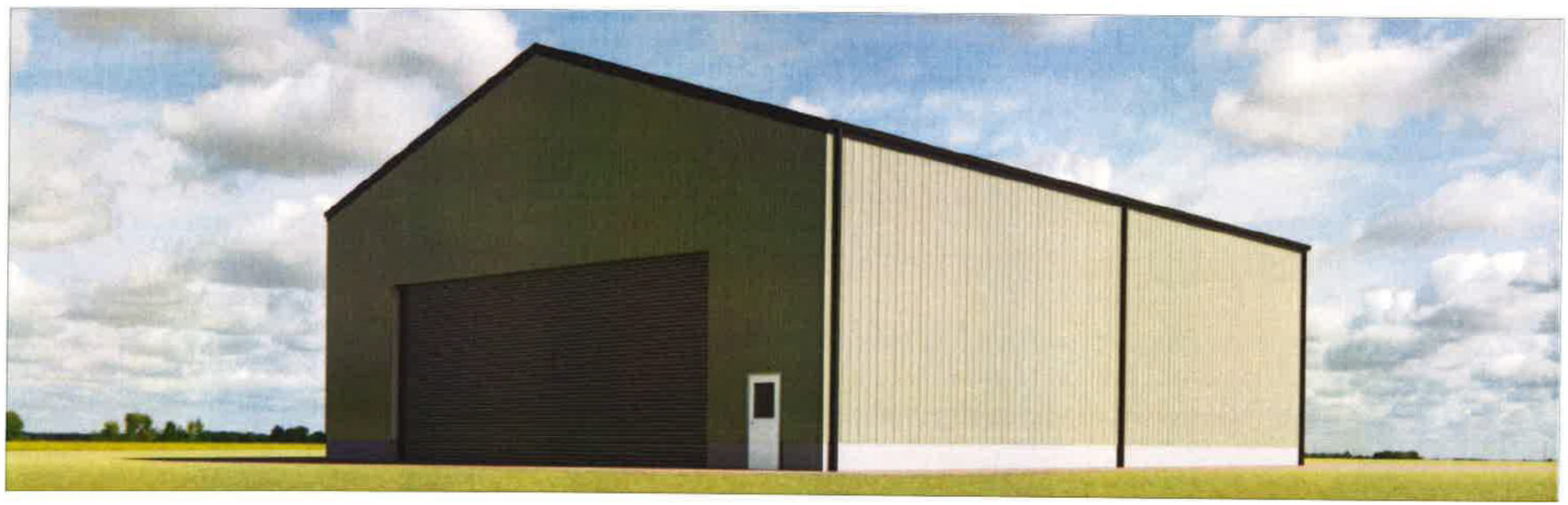

SOUTH WEST VIEW
SCALE N.T.S.

This document and all associated documents may not be used, reproduced or modified in any manner or for any purpose. H.Bye Engineering accepts no liability to any party that relies on these documents without the written consent of H.Bye Engineering.

PROFESSIONAL LICENSE [redacted] Sept. 10, 2025 PROVINCE OF ONTARIO

DRAWING REVISIONS

No.	DATE	REVISION	BY	APPVD

DRAWING RELEASE

DATE	ISSUE	BY	APPVD
SEPT. 6, 2025	FOR PERMIT	R.M.M.	H.B.

ENGINEER:

H.BYE ENGINEERING
MOUNT FOREST
519-323-1527
Since 2017

OWNER:
MAYNARD AND VERA SHANTZ
123812 SOUTHGATE ROAD 12
HOLSTEIN, ONTARIO N0G 2A0

PROJECT NAME / LOCATION:
65'x80' WORKSHOP
123812 SOUTHGATE ROAD 12
HOLSTEIN, ONTARIO N0G 2A0

SHEET TITLE:
RENDERS #1

DWG FILE	2025 09 - Maynard and Vera Shantz - Holstein Shop		
DRAWN BY	R.M.M.	JOB#	2025.131
CHECKED BY	H.B.		
REVISION	N/A		
DATE	SEPT. 6, 2025		
SCALE	AS NOTED		

S12

SHEET SIZE = 17" x 11" - DO NOT SCALE DRAWINGS